Hawkesbury

COMMERCIAL MULTI-FOLD DOOR

alspec® EVERYTHING ALUMINIUM & HARDWARE

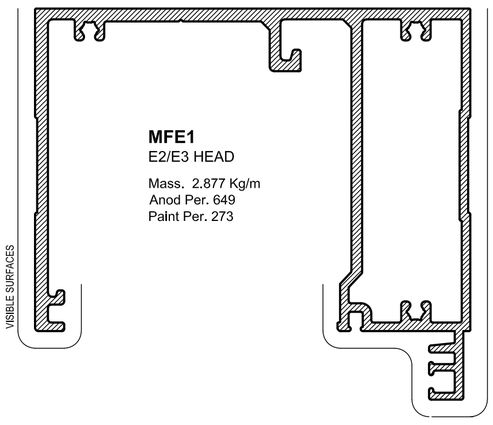

MFE1
E2/E3 HEAD

Mass. 2.877 Kg/m
Anod Per. 649
Paint Per. 273

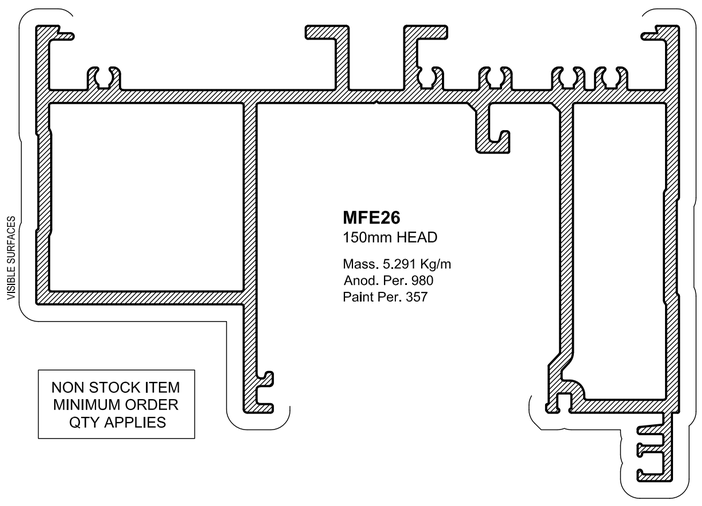

MFE26
150mm HEAD

Mass. 5.291 Kg/m
Anod. Per. 980
Paint Per. 357

NON STOCK ITEM
MINIMUM ORDER
QTY APPLIES

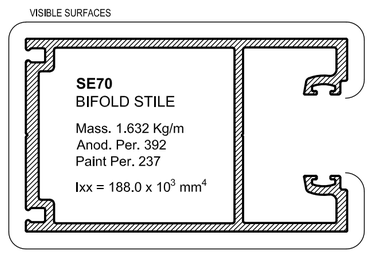

SE70
BIFOLD STILE

Mass. 1.632 Kg/m
Anod. Per. 392
Paint Per. 237

Ixx = 188.0 x 10^3 mm^4

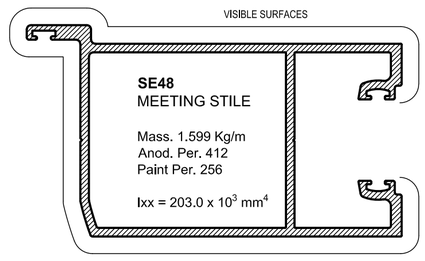

SE48
MEETING STILE

Mass. 1.599 Kg/m
Anod. Per. 412
Paint Per. 256

Ixx = 203.0 x 10^3 mm^4

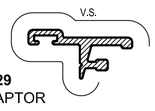

AD29
ADAPTOR

Mass. 0.189 Kg/m
Anod. Per. 100
Paint Per. 100

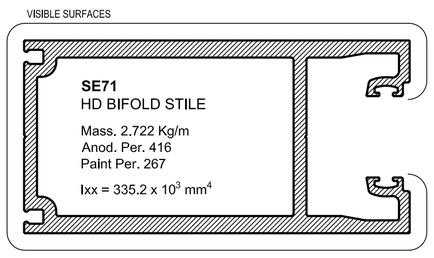

SE71
HD BIFOLD STILE

Mass. 2.722 Kg/m
Anod. Per. 416
Paint Per. 267

Ixx = 335.2 x 10^3 mm^4

SE12
GLAZING BEAD

Mass. 0.248 Kg/m
Anod. Per. 144
Paint Per. 100

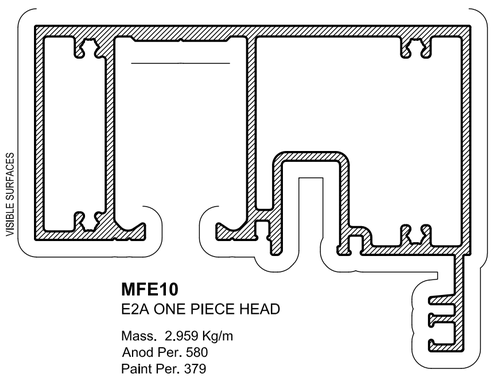

MFE10
E2A ONE PIECE HEAD

Mass. 2.959 Kg/m
Anod Per. 580
Paint Per. 379

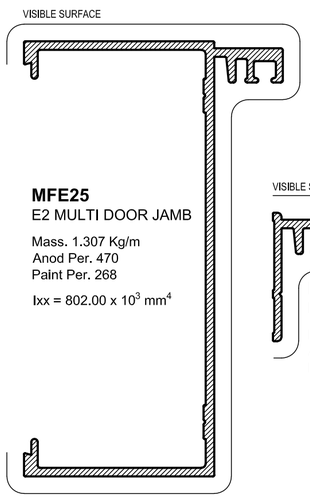

MFE25
E2 MULTI DOOR JAMB

Mass. 1.307 Kg/m
Anod Per. 470
Paint Per. 268

Ixx = 802.00 x 10^3 mm^4

MFE19
DOOR ADAPTOR

Mass. 0.313 Kg/m
Anod Per. 134
Paint Per. 100

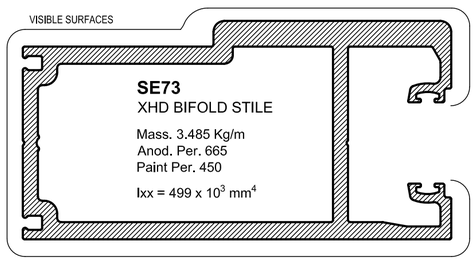

SE73
XHD BIFOLD STILE

Mass. 3.485 Kg/m
Anod. Per. 665
Paint Per. 450

Ixx = 499 x 10^3 mm^4

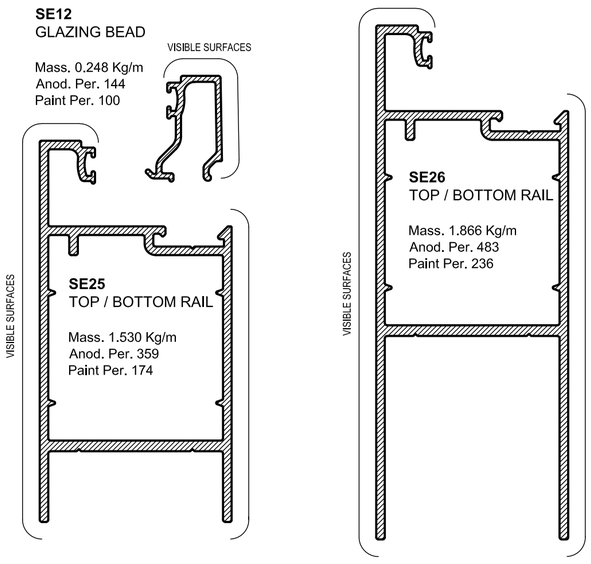

SE25
TOP / BOTTOM RAIL

Mass. 1.530 Kg/m
Anod. Per. 359
Paint Per. 174

SE26
TOP / BOTTOM RAIL

Mass. 1.866 Kg/m
Anod. Per. 483
Paint Per. 236

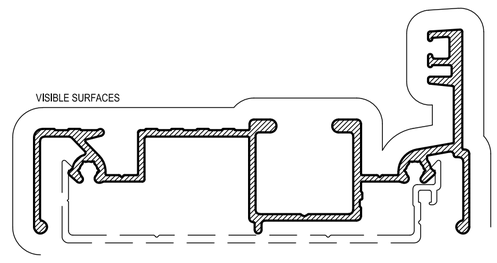

MFE42S
REVERSIBLE SILL

Mass. 1.359 Kg/m
Anod Per. 567
Paint Per. 337

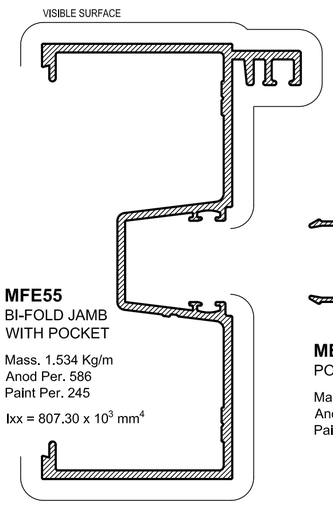

MFE55
BI-FOLD JAMB
WITH POCKET

Mass. 1.534 Kg/m
Anod Per. 586
Paint Per. 245

Ixx = 807.30 x 10^3 mm^4

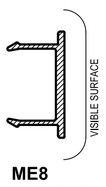

ME8
POCKET FILLER

Mass. 0.181 Kg/m
Anod. Per. 100
Paint Per. 100

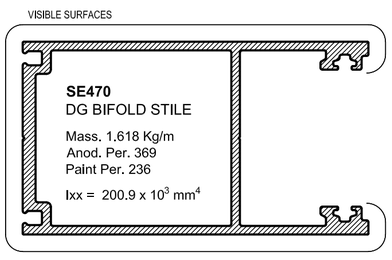

SE470
DG BIFOLD STILE

Mass. 1.618 Kg/m
Anod. Per. 369
Paint Per. 236

Ixx = 200.9 x 10^3 mm^4

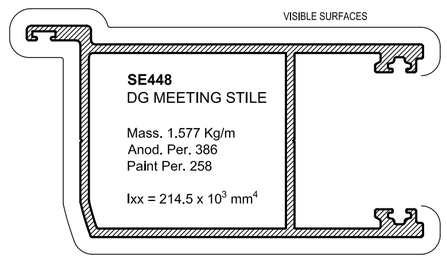

SE448
DG MEETING STILE

Mass. 1.577 Kg/m
Anod. Per. 386
Paint Per. 258

Ixx = 214.5 x 10^3 mm^4

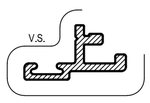

MFA29
MEETING STILE
ADAPTOR

Mass. 0.215 Kg/m
Anod. Per. 100
Paint Per. 100

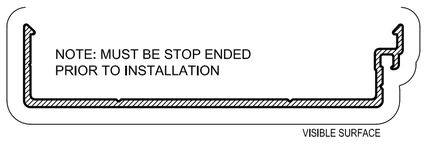

MF22S
SUB SILL

Mass. 0.575 Kg/m
Anod Per. 258
Paint Per. 134

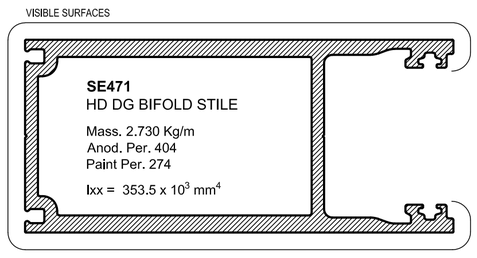

SE471
HD DG BIFOLD STILE

Mass. 2.730 Kg/m
Anod. Per. 404
Paint Per. 274

Ixx = 353.5 x 10^3 mm^4

SE412
DG BEAD

Mass. 0.227 Kg/m
Anod. Per. 101
Paint Per. 100

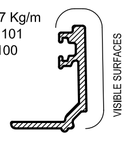

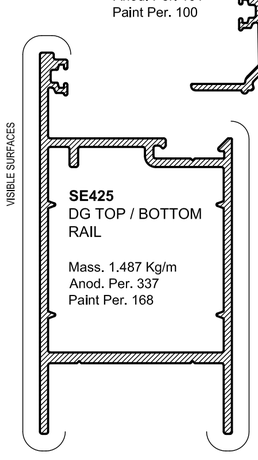

SE425
DG TOP / BOTTOM
RAIL

Mass. 1.487 Kg/m
Anod. Per. 337
Paint Per. 168

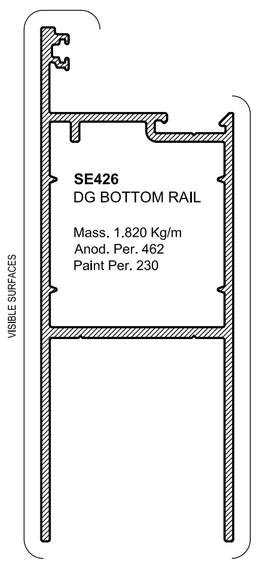

SE426
DG BOTTOM RAIL

Mass. 1.820 Kg/m
Anod. Per. 462
Paint Per. 230

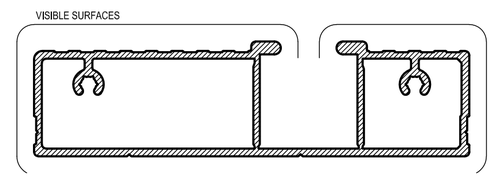

MFE23
PLAIN SILL

Mass. 1.449 Kg/m
Anod Per. 328
Paint Per. 149

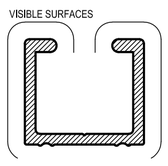

MFE20D
DEEP SILL TRACK

Mass. 0.561 Kg/m
Anod Per. 165
Paint Per. 137

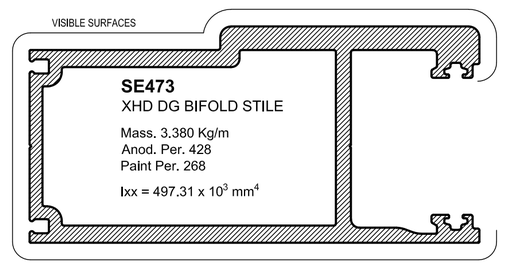

SE473
XHD DG BIFOLD STILE

Mass. 3.380 Kg/m
Anod. Per. 428
Paint Per. 268

Ixx = 497.31 x 10^3 mm^4

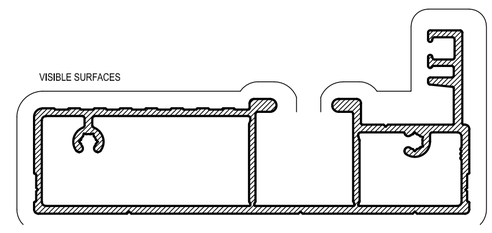

MFE21
REVERSIBLE SILL

Mass. 1.609 Kg/m
Anod Per. 410
Paint Per. 230

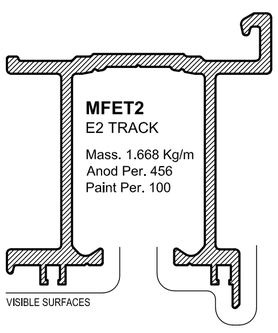

MFET2
E2 TRACK

Mass. 1.668 Kg/m
Anod Per. 456
Paint Per. 100

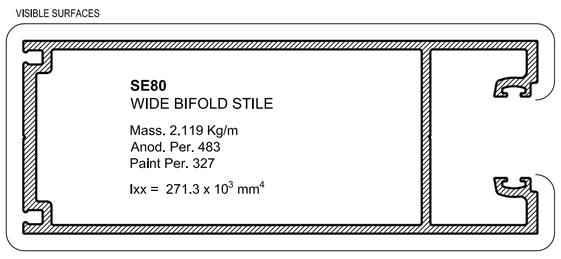

SE80
WIDE BIFOLD STILE

Mass. 2.119 Kg/m
Anod. Per. 483
Paint Per. 327

Ixx = 271.3 x 10^3 mm^4

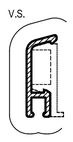

MF75
WEATHERSEAL
SNAP ON COVER

Mass. 0.100 Kg/m
Anod. Per. 100
Paint Per. 100

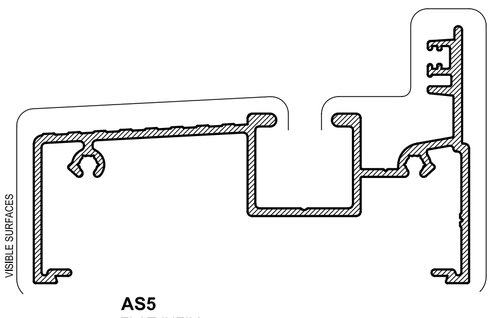

MF100
HIGH PERFORMANCE
SILL

Mass. 1.560 Kg/m
Anod Per. 619
Paint Per. 272

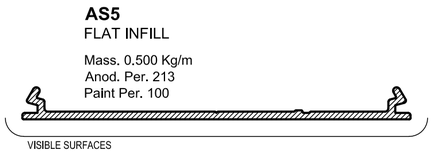

AS5
FLAT INFILL

Mass. 0.500 Kg/m
Anod. Per. 213
Paint Per. 100

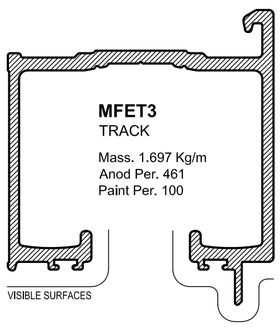

MFET3
TRACK

Mass. 1.697 Kg/m
Anod Per. 461
Paint Per. 100

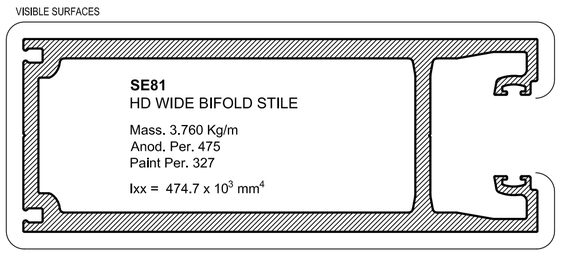

SE81
HD WIDE BIFOLD STILE

Mass. 3.760 Kg/m
Anod. Per. 475
Paint Per. 327

Ixx = 474.7 x 10^3 mm^4

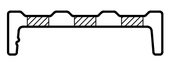

ASGR8
SLOTTED GRATE
THRESHOLD

Mass. 0.364 Kg/m
Anod. Per. 105
Paint Per. 100

PRE PUNCHED AND
CLEAR ANODISED

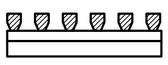

PRG018
36mm SS STORM
GRATE 1000mm

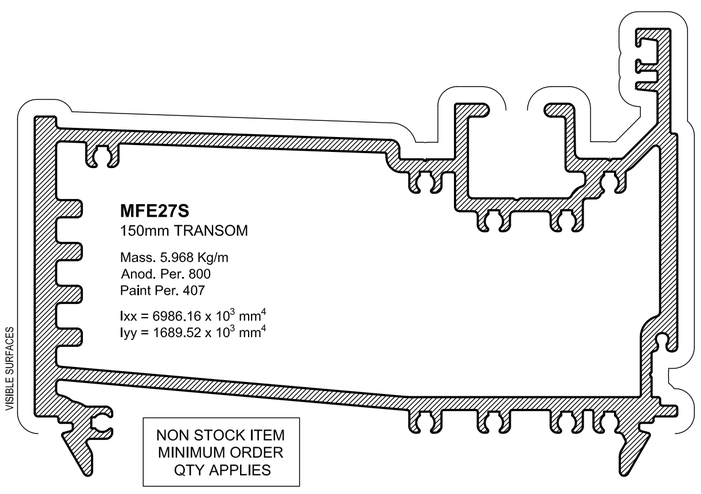

MFE27S
150mm TRANSOM

Mass. 5.968 Kg/m
Anod. Per. 800
Paint Per. 407

Ixx = 6986.16 x 10^3 mm^4
Iyy = 1689.52 x 10^3 mm^4

NON STOCK ITEM
MINIMUM ORDER
QTY APPLIES

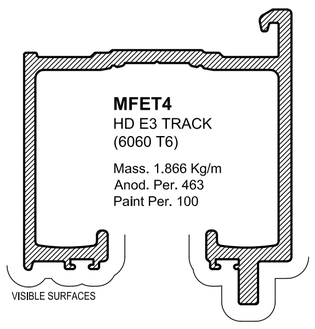

MFET4
HD E3 TRACK
(6060 T6)

Mass. 1.866 Kg/m
Anod. Per. 463
Paint Per. 100

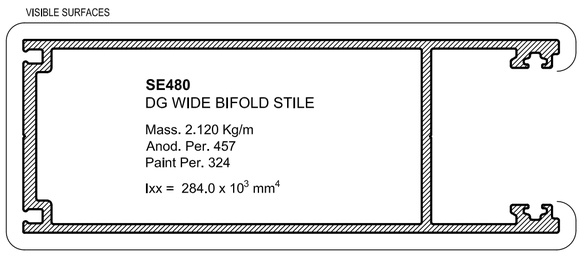

SE480
DG WIDE BIFOLD STILE

Mass. 2.120 Kg/m
Anod. Per. 457
Paint Per. 324

Ixx = 284.0 x 10^3 mm^4

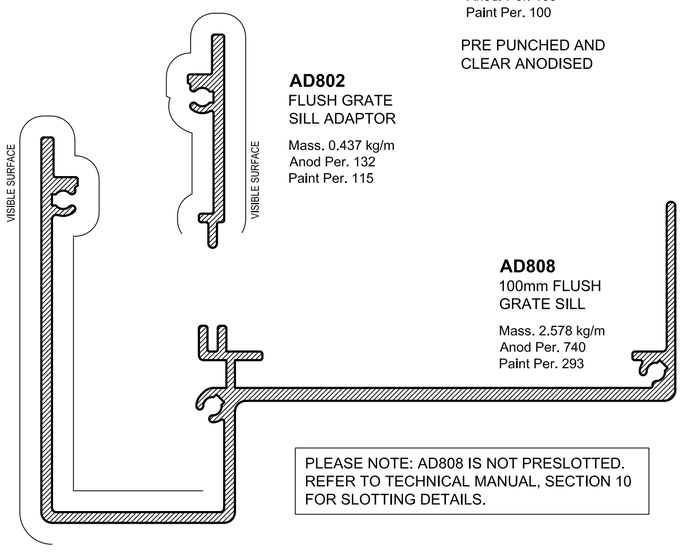

AD802
FLUSH GRATE
SILL ADAPTOR

Mass. 0.437 kg/m
Anod Per. 132
Paint Per. 115

AD808
100mm FLUSH
GRATE SILL

Mass. 2.578 kg/m
Anod Per. 740
Paint Per. 293

PLEASE NOTE: AD808 IS NOT PRESLOTTED.
REFER TO TECHNICAL MANUAL, SECTION 10
FOR SLOTTING DETAILS.

SYDNEY BRANCH
3 Alspec Place
Eastern Creek NSW 2766
Ph: 02 9834 9500
sydney@alspec.com.au

MELBOURNE BRANCH
26–40 Pound Road West
Dandenong South VIC 3175
Phone: 03 8787 6333
melbourne@alspec.com.au

BRISBANE BRANCH
8–22 Jutland Street
Loganlea QLD 4131
Phone: 07 3089 4900
brisbane@alspec.com.au

ADELAIDE BRANCH
1 Pope Court
Beverley SA 5009
Phone: 08 8150 6960
adelaide@alspec.com.au

DARWIN BRANCH
25 Bishop Street
Woolner NT 0820
Phone: 08 8941 7300
darwin@alspec.com.au

CANBERRA BRANCH
28 Sheppard Street
Hume ACT 2620
Phone: 02 5134 3300
canberra@alspec.com.au

PERTH BRANCH
30 Holder Way
Malaga WA 6090
Phone: 08 9209 9100
perth@alspec.com.au

NEWCASTLE BRANCH
95 Griffiths Road
Lambton NSW 2299
Phone: 02 4952 9111
newcastle@alspec.com.au

BRENDALE BRANCH
24 Doherty Street
Brendale QLD 4500
Phone: 07 3205 9911
brendale@alspec.com.au

SUNSHINE COAST BRANCH
4-8 Empire Crescent
Chevallum QLD 4555
Phone: 07 5437 6123
sunshinecoast@alspec.com.au

TOWNSVILLE BRANCH
21 Carroll Street
Mount Louisa QLD 4814
Phone: 07 3089 4965
townsville@alspec.com.au

CAIRNS BRANCH
34–38 Hargreaves Street
Edmonton QLD 4869
Phone: 07 4037 6666
cairns@alspec.com.au

BUNDABERG BRANCH
17 Production Street
Svensson Heights QLD 4670
Phone: 07 4111 2000
bundaberg@alspec.com.au

CARRUM DOWNS BRANCH
99 Frankston Gardens Drive
Carrum Downs VIC 3201
Phone: 03 9775 1223
carrumdowns@alspec.com.au

1300 ALSPEC (257732)

alspec.com.au