30mm 443 Awning Window

Technical Manual

January 2025 / ISSUE B

alspec®
EVERYTHING ALUMINIUM & HARDWARE

COPYRIGHT

This Technical manual remains the property of Aluminium Specialties Group Pty Limited and contains privileged information which is the subject of copyright and the manual or any part thereof may not be reproduced, copied or loaned in any form without the written permission of Aluminium Specialties Group Pty Limited.

This manual is to be returned to Aluminium Specialties Group Pty Limited when requested.

DISCLAIMER

Whilst every effort has been made to ensure the technical details contained within this manual are accurate, Aluminium Specialties Group Pty Limited can take no responsibilities for any loss or damage whatsoever arising as a result of any errors contained in this manual.

Also, interpretation of standards or codes within this manual is Aluminium Specialties Group Pty Limited interpretation for such codes. Responsibility for code compliance remains with the user of this manual. In some cases product dimensions may vary or be changed without notice. The user of this manual should not act or rely upon on any information contained in this manual without first obtaining appropriate professional advice relating to their particular circumstances.

Aluminium Specialties Group Pty Limited disclaims all liability for loss or damage suffered by any party who acts or fails to act in reliance of this manual.

Contents

1. TECHNICAL MANUAL RELEASE NOTES **1.1**

2. TECHNICAL SPECIFICATIONS **2.1**

4. TEST SUMMARY **4.1**

AS2047 - McArthur Evo 101.6mm Framing plus Awning 4.1

5. EXTRUSIONS **5.1**

Framing 5.1

Awning Sash Adaptor Selection Chart 5.2

6. HARDWARE & COMPONENTS **6.1**

Glazing Wedges 6.1

Backing Gasket 6.1

Channels 6.2

Seals 6.2

Fasteners 6.2

Frame Joint Gaskets 6.3

Accessories 6.3

Chainwinders & Cam Handles 6.4

Silicone 6.5

Silicone Product Codes 6.6

7. TYPICAL ELEVATION **7.1**

8. TYPICAL DETAILS **8.1**

443 SG Awning in McArthur Evo Head & Sill Details 8.1

443 DG Awning in ecoFRAMEplus 101.6mm Head & Sill Details 8.3

443 DG ecoFRAMEplus 101.6mm Jamb Detail 8.4

9. CUTTING FORMULAS **9.1**

Typical 443 Sash in Single Glazed Center Pocket Frames - 6mm Jamb Clearance 9.1

10. MANUFACTURING DETAILS **10.1**

443-A SG Sash Bottom Rail Machining Details 10.1

443-K DG Sash Bottom Rail Machining Details 10.2

443-B SG Sash Top Rail Machining Details 10.3

443-J DG Sash Top Rail Machining Details 10.4

McArthur Evo Frame Preparation 10.5

ecoFRAMEplus 101.6mm Frame Preparation 10.6

443-F Winder Adaptor Notch 10.7

ASW43 Awning Winder Machining 10.8

ME33 McArthur Evo Sash Adaptor Chain Winder Notch 10.9

11. ASSEMBLY DETAILS **11.1**

McArthur Evo Framing & Transom Sealing Detail 11.1
30mm 443 Sash Corner Assembly 11.2

12. GLAZING DETAILS 12.1
Glazing Details 443-A Single Glazed 12.1
Glazing Details 443-K Double Glazed 12.2

13. CARE & MAINTENANCE 13.1

1. Technical Manual Release Notes

This page is intended to record all changes to the **30mm 443 AWNING WINDOW** technical manual pages.

Changes or additions to this manual will be itemised with a brief description and date when the amendments were made.

ISSUE	DATE	Amendment Description	Refer to Tech Memo #
A	02/2020	Technical Manual Release	362
B	09/2022	Added OT22-129 to Test Summary page 4.1	529

2. Technical Specifications

ALUMINIUM
Aluminium frames should be manufactred using Alspec's **30mm 443 AWNING WINDOW** framing system.

Awning Sash
Maximum Height - 1100mm O/A Sash
Minimum Height - 290mm O/A Sash

Maximum Width - 1000mm O/A Sash
Minimum Width - 350mm O/A Sash

Maximum Sash Weight - 18kg

HARDWARE
The hardware shall be Alspec's specific glazing tapes, colour coded wedges and glazing channels for **30mm 443 AWNING WINDOW**.
- All other hardware as per Alspec Technical Manual

FINISHED
- All powder coated material shall be produced to AS3715
- All anodised material shall be produced to AS1231

TESTING
Product shall have a test report to show compliance to AS2047.

All products are available from Alspec (A.B.N. 63 001 252 259) as detailed in the "Alspec" catalogue or on the Internet at www.alspec.com.au. All such framing is to be constructed, assembled and fixed to meet the requirement of AS2047 (windows in buildings), AS1170 (loading code). All glass, glazing rubbers, seals and gaskets shall be applied in accordance with the requirements of AS1288 (glass in buildings - selection and installation).

Fabricators of the 30mm 443 AWNING WINDOW framing system should seek certification by a consultant structural engineer as to the framing being acceptable for the design wind pressure and deflection characteristics required of the site.

4. Test Summary

AS2047 - McArthur Evo 101.6mm Framing plus Awning

TEST REPORT:	OT22-129
SYSTEM CONFIGURATION	MCARTHUR EVO 101.6mm FRAMING WITH 443A AWNING SASH
TEST SAMPLE SIZE	1.15m High x 0.9m Wide
SERVICEABILITY LOAD	+/- 1801 Pa
ULTIMATE LOAD	+/- 4006 Pa
WATER PENETRATION	540 Pa
AIR INFILTRATION @ 75Pa	75Pa + 0.26L/s/m² - 0.15L/s/m²

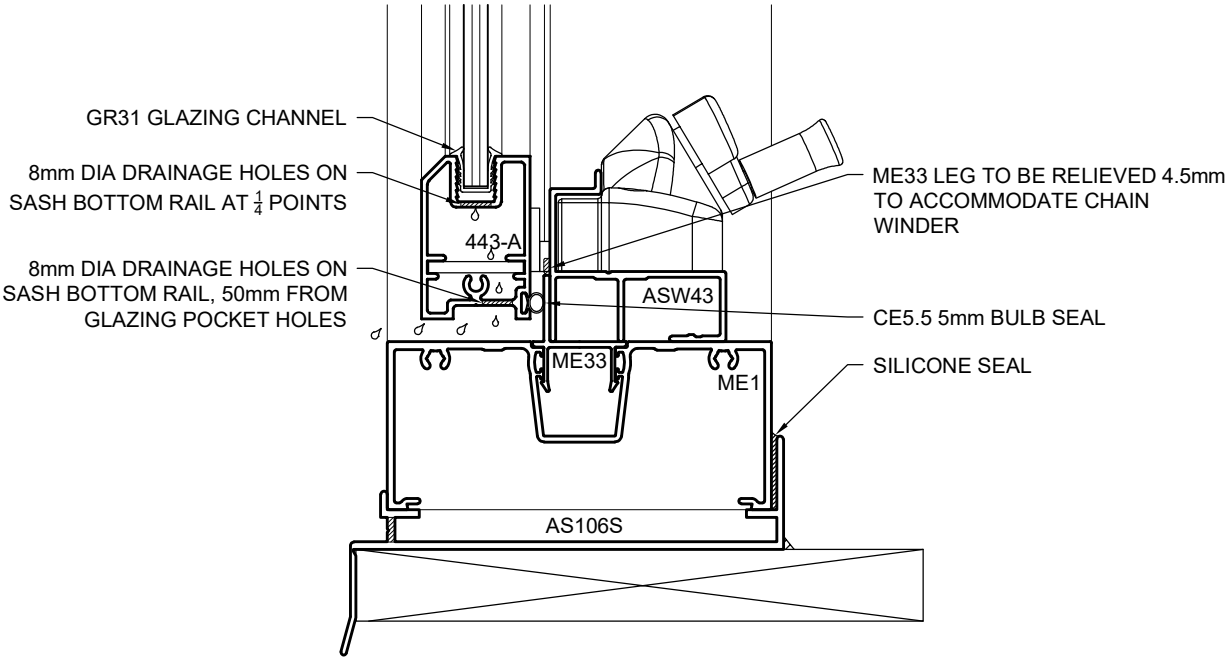

DISCLAIMER:
Please note that the test results shown above reflect specific configurations of a system and are representative only. If a specific high wind load or a different configuration (i.e. changes to frames, transoms, mullions) is required on a project please discuss with Alspec prior to commencement.

5. Extrusions

Framing

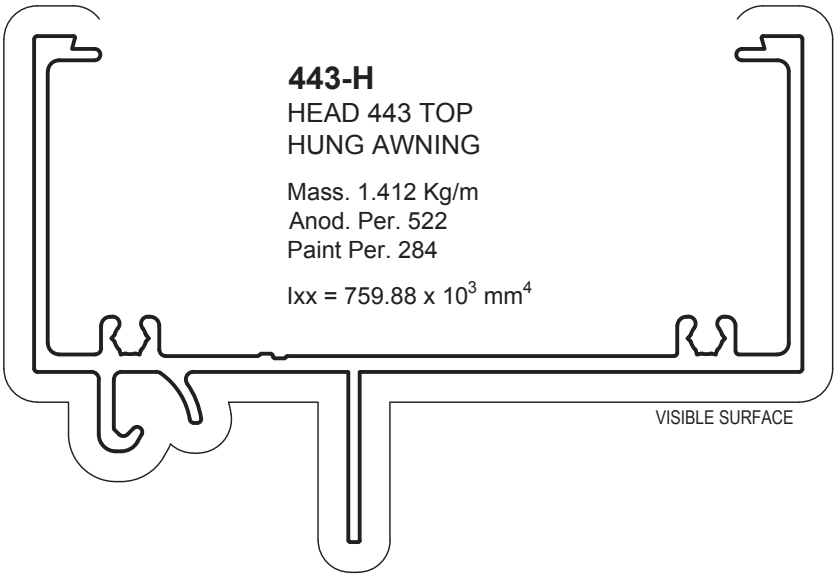

443-H
HEAD 443 TOP
HUNG AWNING

Mass. 1.412 Kg/m
Anod. Per. 522
Paint Per. 284

Ixx = 759.88 x 10^3 mm^4

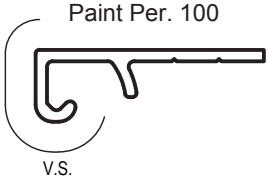

443-C
AWNING HINGE

Mass. 0.192 Kg/m
Anod. Per. 100
Paint Per. 100

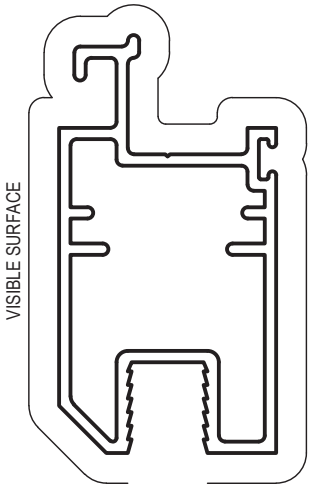

443-B
HINGE SASH

Mass. 0.838 Kg/m
Anod. Per. 222
Paint Per. 185

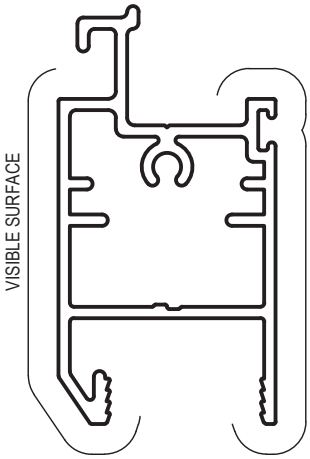

443-J
HINGE SASH DG

Mass. 0.840 Kg/m
Anod. Per. 239
Paint Per. 114

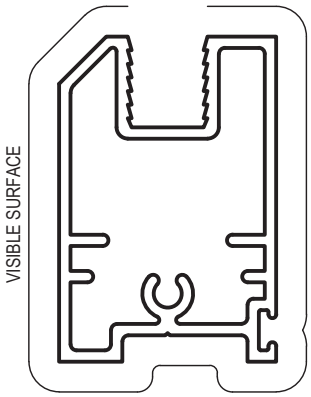

443-A
SASH

Mass. 0.810 Kg/m
Anod. Per. 181
Paint Per. 158

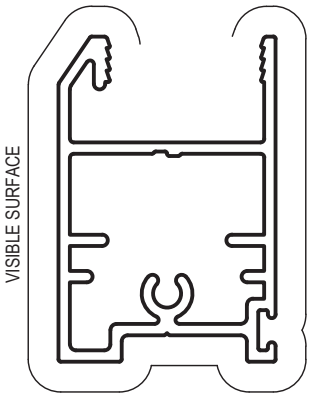

443-K
SASH DG

Mass. 0.751 Kg/m
Anod. Per. 199
Paint Per. 136

Awning Adaptors

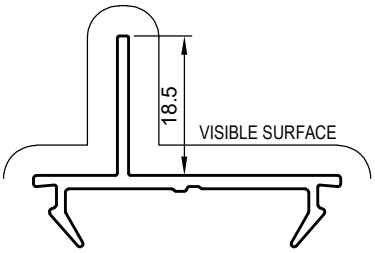

443-L
SASH ADAPTOR

Mass. 0.328 Kg/m
Anod. Per. 156
Paint Per. 100

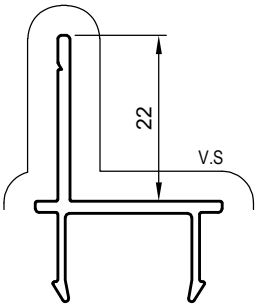

ME33
443 SASH
ADAPTOR

Mass. 0.268 Kg/m
Anod. Per. 143
Paint Per. 100

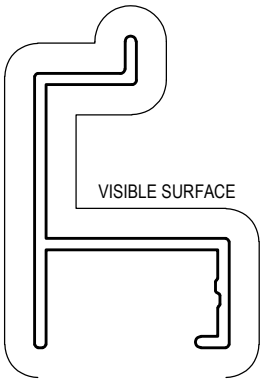

443-F
AWNING WINDER
ADAPTOR

Mass. 0.379 Kg/m
Anod. Per. 183
Paint Per. 132

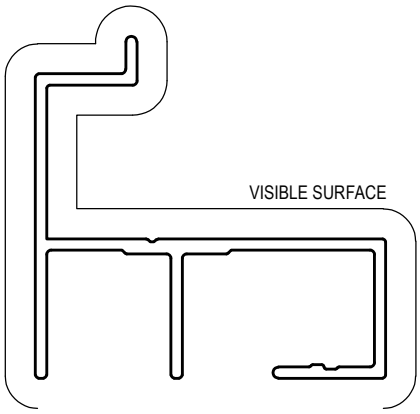

ASW43
AWNING WINDER
ADAPTOR

Mass. 0.624 Kg/m
Anod. Per. 299
Paint Per. 160

Awning Sash Adaptor Selection Chart

SECTION	DESCRIPTION
ME33	McARTHUR EVO 101.6mm CENTRE POCKET GLAZED FRAMING
443-L	ecoFRAMEplus 101.6mm CENTRE POCKET DOUBLE GLAZED FRAMING

6. Hardware & Components

Glazing Wedges

IMAGE	TO SUIT GAP	MATERIAL	PART #	DESCRIPTION
	3mm	PVC	1313055	GR43 GLAZING WEDGE (BROWN) (3mm GAP) PVC x 200m ROLL
		S/PRENE	1313063	GR43S GLAZING WEDGE (BROWN) (3mm GAP) S/PRENE x 200m ROLL
	5mm	PVC	1313057	GR45 GLAZING WEDGE (BLUE) (5mm GAP) PVC x 150m ROLL
		S/PRENE	1313065	GR45S GLAZING WEDGE (BLUE) (5mm GAP) S/PRENE x 150m ROLL
	7mm	PVC	1313059	GR47 GLAZING WEDGE (RED) (7mm GAP) PVC x 150m ROLL
		S/PRENE	1313062	GR47S GLAZING WEDGE (RED) (7mm GAP) S/PRENE x 150m ROLL

Backing Gasket

IMAGE	TO SUIT GAP	MATERIAL	PART #	DESCRIPTION
	2mm	PVC	1313079	CE36 CO-EXT BACKING GASKET (2mm GAP) PVC x 100m ROLL
		S/PRENE	1313080	CE36S CO-EXT BACKING GASKET (2mm GAP) S/PRENE x 100m ROLL
	4mm	PVC	1313081	CE37 CO-EXT BACKING GASKET (4mm GAP) PVC x 100m ROLL
		S/PRENE	1313082	CE37S CO-EXT BACKING GASKET (4mm GAP) S/PRENE x 100m ROLL
	6mm	PVC	1313083	CE49 CO-EXT BACKING GASKET (6mm GAP) PVC x 100m ROLL
		S/PRENE	1313084	CE49S CO-EXT BACKING GASKET (6mm GAP) S/PRENE x 100m ROLL

6. Hardware & Components

Channels

IMAGE	TO SUIT GLASS	MATERIAL	PART #	DESCRIPTION
	4mm	PVC	1376133	GR33 GLAZING CHANNEL (4mm GLASS) x 150m ROLL
	5mm	PVC	1376234	GR34 GLAZING CHANNEL (5mm GLASS) x 150m ROLL
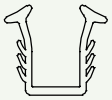	6mm	PVC	1376130	GR31 GLAZING CHANNEL (6mm GLASS) x 150m ROLL
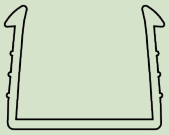	18mm	PVC	1376087	GR53 DG GLAZING CHANNEL (18mm GLASS) x 75m ROLL

Seals

IMAGE	PART #	MATERIAL	DESCRIPTION
	1376345	PVC	CE5.5 CO-EXT BULB SEAL (5.5mm DIAMETER) x 250m ROLL
	1385580	PVC	DOUBLE SIDED GLAZING TAPE 12mm x 1.6mm 61m ROLL
	1385549		60403 12mm x 3.2mm DOUBLE SIDED GLAZING TAPE x 30.5m
	1385577		60405 12mm x 4.8mm DOUBLE SIDED GLAZING TAPE x 15.2m
	1385506		60406 12mm x 6.4mm DOUBLE SIDED GLAZING TAPE x 10.7m

Fasteners

SCREWS		
PART #	HEAD	DESCRIPTION
1382645	SQUARE	10g x 1 1/4 (32mm) 304SS SQ #2 PAN S/TAP SCREW x 1000
1382643	SQUARE	10g x 1/2 (13mm) 304SS SQ #2 PAN S/TAP SCREW x 1000
1382644	SQUARE	10g x 1 (25mm) 304SS SQ #2 PAN S/TAP SCREW x 1000
1382054	PHILLIPS	10g x 1 (25mm) SS PHIL PAN S/TAP SCREW x 500
1382095	PHILLIPS	10g x 1 (25mm) SS PHILLIPS CSK S/TAP x 200

Frame Joint Gaskets

PART #	DESCRIPTION	FINISH
1385512	FJG45 FRAME JOINT GASKET PVC FOAM TAPE 45 x 1.6mm 45.7m	BLACK (034)
		GREY (036)
1385509	FJG50 FRAME JOIN T GASKET PVC FOAM TAPE 50 x 1.6mm 45.7m	BLACK (034)
		GREY (036)
1385551	FJG001 45mm x 102mm 1010 PER ROLL	BLACK (034)
		GREY (036)

Accessories

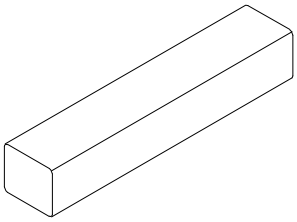

SETTING BLOCK 13 x 15x 75mm BAG OF 50	
PART	1376730
FINISH	GREY (036)
QTY	BAG

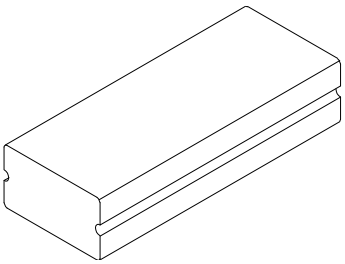

SETTING BLOCK 17 x 30 X 75mm BAG OF 50	
PART	1376734
FINISH	BLACK (034)
QTY	BAG

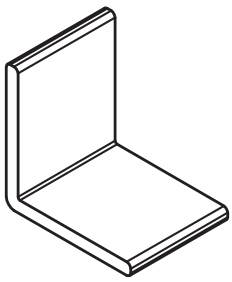

ALSPEC 443 CORNER FOR 443-A SASH	
PART	1311296
FINISH	MILL (001)
QTY	EACH

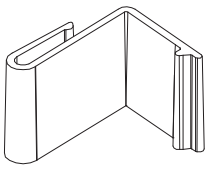

FS11 ALSPEC 11mm FLYSCREEN RETAINER CLIP	
PART	1309055
FINISH	TRANSPARENT (050)
QTY	EACH

Chainwinders & Cam Handles

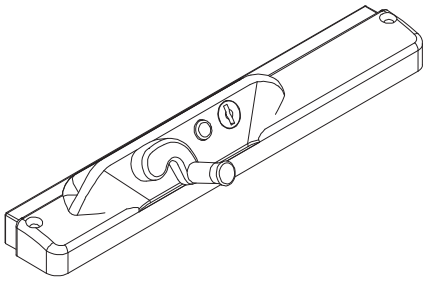

ALSPEC CHAINWINDER S/S LOCKING 300mm LEFT HAND KEY 32304		
PART / FINISH	1338065	BLACK (034)
	1338066	WHITE (0I5)
	1338067	SILVER PAINT (031)
QTY	EACH	

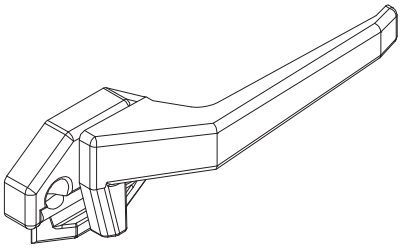

ALSPEC CAM HANDLE HI-PROFILE SELF LATCH		
PART	1377954 (RH)	1377953 (LH)
FINISH	BLACK (034)	
QTY	EACH	

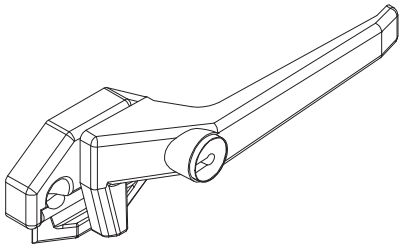

ALSPEC CAM HANDLE HI-PROFILE SELF LATCH - LOCKABLE		
PART	1377863 (RH)	1377862 (LH)
FINISH	BLACK (034)	
QTY	EACH	

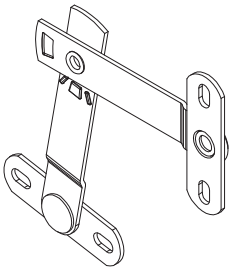

RESTRICTOR STAYS		
CODE	DESCRIPTION	QTY
1377947	ALSPEC RESTRICTOR STAY SS 13mm LIGHT DUTY	PAIR
1377948	ALSPEC RESTRICTOR STAY SS 16mm HEAVY DUTY	PAIR
1377949	ALSPEC RESTRICTOR STAY & KEY SS 16mm HEAVY DUTY	PAIR

6. Hardware & Components

Silicone

100% NEUTRAL CURE SILICONE

- Premium 100% silicone
- UV Stable
- Superior adhesion
- Flexible + 25%
- AS4020 Approved

100% MATTE NEUTRAL CURE SILIICONE

- Premium 100% silicone
- Matte finish
- UV Stable
- Outstanding elongation
- Higher strength

41 CLADDING SILICONE

- Premium 100% silicone
- UV Stable
- Superior adhesion
- Movement capability + 50%

WET AREA SILICONE

- Premium 100% silicone
- Mould inhibited
- Movement capability + 25%
- UV Stable
- Non corrosive
- Superior adhesion

HYBRID PU ADHESIVE SEALANT

- No isocyanates
- Internal/External
- No shrinking/staining
- Paintable
- Excellent adhesion

20 ACETIC CURE SILICONE

- Premium 100% silicone
- UV Stable
- Superior adhesion
- Flexible + 25%

D60 SILICONE

- Premium 100% silicone
- UV Stable
- 2-5 minute skin time
- Flexible + 25%
- No slump

*For more information on silicones, please refer to Alspec Silicone Brochure.

Silicone Product Codes

Product Category	Item No.	Alspec Part No. Code	Description	Finish	Pack
ALSPEC 100%	1	1386113	ALSPEC 100% NEUTRAL CURE SILICONE x 310g CAT	ALMOND IVORY	CARTRIDGE
	2	1386114	ALSPEC 100% NEUTRAL CURE SILICONE x 310g CAT	ALUMINIUM	CARTRIDGE
	3	1386105	ALSPEC 100% NEUTRAL CURE SILICONE x 310g CAT	BLACK	CARTRIDGE
	4	1386140	ALSPEC 100% NEUTRAL CURE SILICONE x 310g CAT	CAULFIELD GREEN	CARTRIDGE
	5	1386111	ALSPEC 100% NEUTRAL CURE SILICONE x 310g CAT	CLASSIC CREAM	CARTRIDGE
	6	1386108	ALSPEC 100% NEUTRAL CURE SILICONE x 310g CAT	GREY	CARTRIDGE
	7	1386138	ALSPEC 100% NEUTRAL CURE SILICONE x 310g CAT	MONUMENT	CARTRIDGE
	8	1386112	ALSPEC 100% NEUTRAL CURE SILICONE x 310g CAT	OFF WHITE	CARTRIDGE
	9	1386141	ALSPEC 100% NEUTRAL CURE SILICONE x 310g CAT	STONE BEIGE	CARTRIDGE
	10	1386101	ALSPEC 100% NEUTRAL CURE SILICONE x 310g CAT	TRANSLUCENT	CARTRIDGE
	11	1386106	ALSPEC 100% NEUTRAL CURE SILICONE x 310g CAT	WHITE	CARTRIDGE
	12	1386143	ALSPEC 100% NEUTRAL CURE SILICONE x 310g CAT	WOODLAND GREY	CARTRIDGE
ALSPEC 100% MATT	13	1386103	ALSPEC 100% NEUTRAL CURE SILICONE x 420g CAT	BLACK MATT	CARTRIDGE
	14	1386107	ALSPEC 100% NEUTRAL CURE SILICONE x 420g CAT	GREY MATT	CARTRIDGE
	15	1386144	ALSPEC 100% NEUTRAL CURE SILICONE x 420g CAT	WHITE MATT	CARTRIDGE
ALSPEC 20	16	1386115	ALSPEC 20 SILICONE x 310g CAT	TRANSLUCENT	CARTRIDGE
ALSPEC 41 CLADDING	17	1386159	ALSPEC 41 SILICONE x 400g CAT	BLACK MATT	CARTRIDGE
	18	1386117	ALSPEC 41 SILICONE x 600ml SAU	BLACK MATT	SAUSAGE
	19	1386158	ALSPEC 41 SILICONE x 400g CAT	LIGHT GREY MATT	CARTRIDGE
	20	1386118	ALSPEC 41 SILICONE x 600ml SAU	LIGHT GREY MATT	SAUSAGE
	21	1386157	ALSPEC 41 SILICONE x 400g CAT	WHITE MATT	CARTRIDGE
	22	1386145	ALSPEC 41 SILICONE x 600ml SAU	WHITE MATT	SAUSAGE
ALSPEC D60	23	1386121	ALSPEC D60 SILICONE x 310g CAT	BLACK	CARTRIDGE
	25	1386123	ALSPEC D60 SILICONE x 310g CAT	GREY	CARTRIDGE
	26	1386120	ALSPEC D60 SILICONE x 310g CAT	TRANSLUCENT	CARTRIDGE
	27	1386124	ALSPEC D60 SILICONE x 310g CAT	WHITE	CARTRIDGE
ALSPEC HYBRID PU	28	1386127	ALSPEC HYBRID PU x 480g CAT	BLACK	CARTRIDGE
	29	1386126	ALSPEC HYBRID PU x 600ml SAU	BLACK	SAUSAGE
	30	1386160	ALSPEC HYBRID PU x 480g CAT	GREY	CARTRIDGE
	31	1386128	ALSPEC HYBRID PU x 600ml SAU	GREY	SAUSAGE
	32	1386130	ALSPEC HYBRID PU x 480g CAT	WHITE	CARTRIDGE
	33	1386129	ALSPEC HYBRID PU x 600ml SAU	WHITE	SAUSAGE
ALSPEC WET AREA	34	1386137	ALSPEC WET AREA SILICONE x 310g CAT	ALMOND IVORY	CARTRIDGE
	35	1386139	ALSPEC WET AREA SILICONE x 310g CAT	BLACK	CARTRIDGE
	36	1386146	ALSPEC WET AREA SILICONE x 310g CAT	BLUESTONE	CARTRIDGE
	37	1386147	ALSPEC WET AREA SILICONE x 310g CAT	CHARCOAL	CARTRIDGE
	38	1386136	ALSPEC WET AREA SILICONE x 310g CAT	LIGHT GREY	CARTRIDGE
	39	1386148	ALSPEC WET AREA SILICONE x 310g CAT	MID GREY	CARTRIDGE
	40	1386149	ALSPEC WET AREA SILICONE x 310g CAT	OFF WHITE	CARTRIDGE
	41	1386150	ALSPEC WET AREA SILICONE x 310g CAT	PEWTER	CARTRIDGE
	42	1386151	ALSPEC WET AREA SILICONE x 310g CAT	STONE BEIGE	CARTRIDGE
	43	1386154	ALSPEC WET AREA SILICONE x 310g CAT	TAUPE	CARTRIDGE
	44	1386152	ALSPEC WET AREA SILICONE x 310g CAT	TILE GREY	CARTRIDGE
	45	1386133	ALSPEC WET AREA SILICONE x 310g CAT	TRANSLUCENT	CARTRIDGE
	46	1386153	ALSPEC WET AREA SILICONE x 310g CAT	TRAVERTINE	CARTRIDGE
	47	1386134	ALSPEC WET AREA SILICONE x 310g CAT	WHITE	CARTRIDGE

7. Typical Elevation

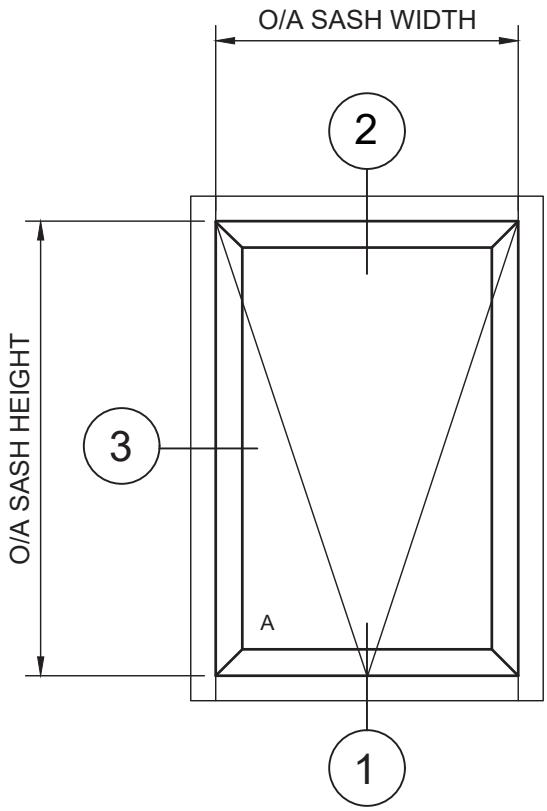

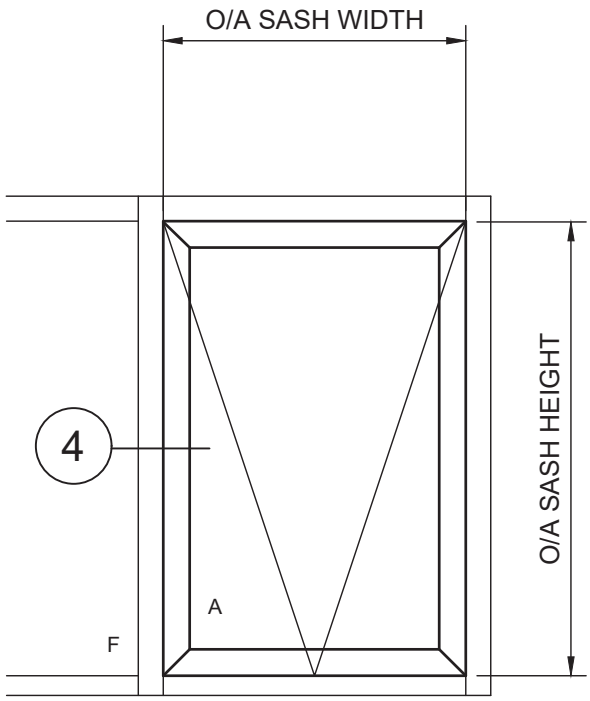

443 SG Awning in McArthur Evo Head & Sill Details

NOTE: ALL METAL TO METAL JOINTS UNLESS OTHERWISE NOTED ARE TO BE SEALED WATER TIGHT WITH A SMALL JOINT SEALER OR AN APPROVED SILICONE INCLUDE SASH ADAPTORS.

WELD ALL BULB SEAL MITRE JOINTS

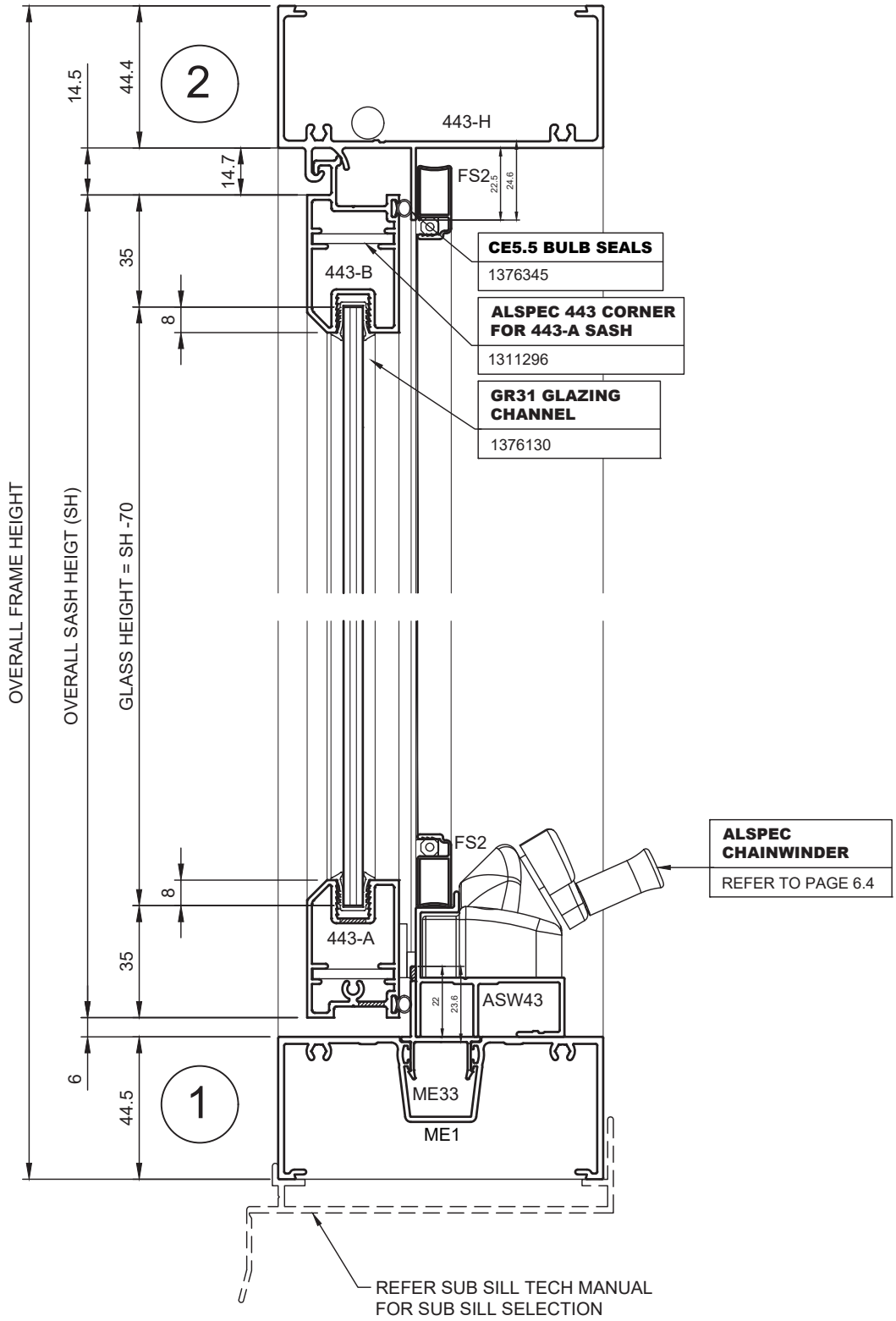

8. Typical Details

443 SG McArthur Evo Jamb & Sidelight Details

NOTE: ALL METAL TO METAL JOINTS UNLESS OTHERWISE NOTED ARE TO BE SEALED WATER TIGHT WITH A SMALL JOINT SEALER OR AN APPROVED SILICONE INCLUDE SASH ADAPTORS.

WELD ALL BULB SEAL MITRE JOINTS

NOTE: FS11 SCREEN CLIPS LOCATED 100mm DOWN FROM U/S OF HEAD TO BOTH JAMBS.

FOR SCREEN HEIGHTS AND WIDTHS GREATER THAN 1.2m ADD ADDITIONAL SCREEN CLIPS EVENLY SPACED TO ENSURE SCREEN CONTACTS THE JAMBS.

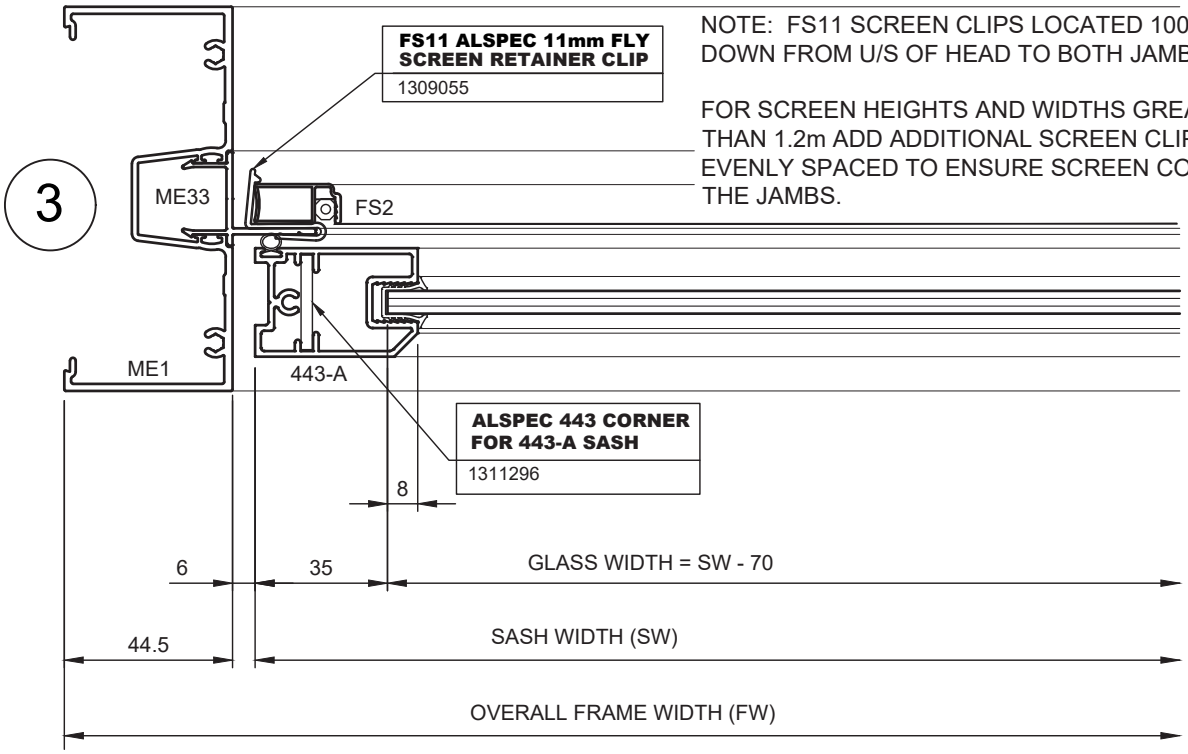

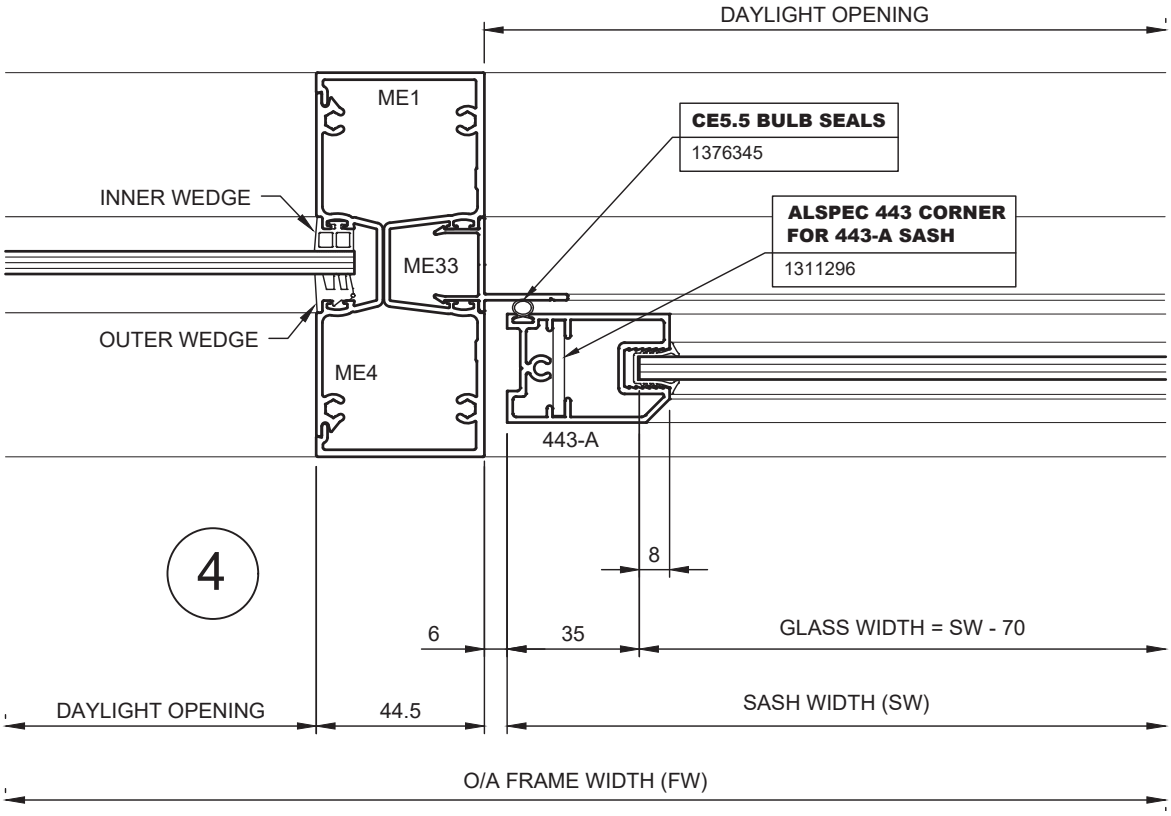

443 DG Awning in ecoFRAMEplus 101.6mm Head & Sill Details

NOTE: ALL METAL TO METAL JOINTS UNLESS OTHERWISE NOTED ARE TO BE SEALED WATER TIGHT WITH A SMALL JOINT SEALER OR AN APPROVED SILICONE INCLUDE SASH ADAPTORS.

WELD ALL BULB SEAL MITRE JOINTS

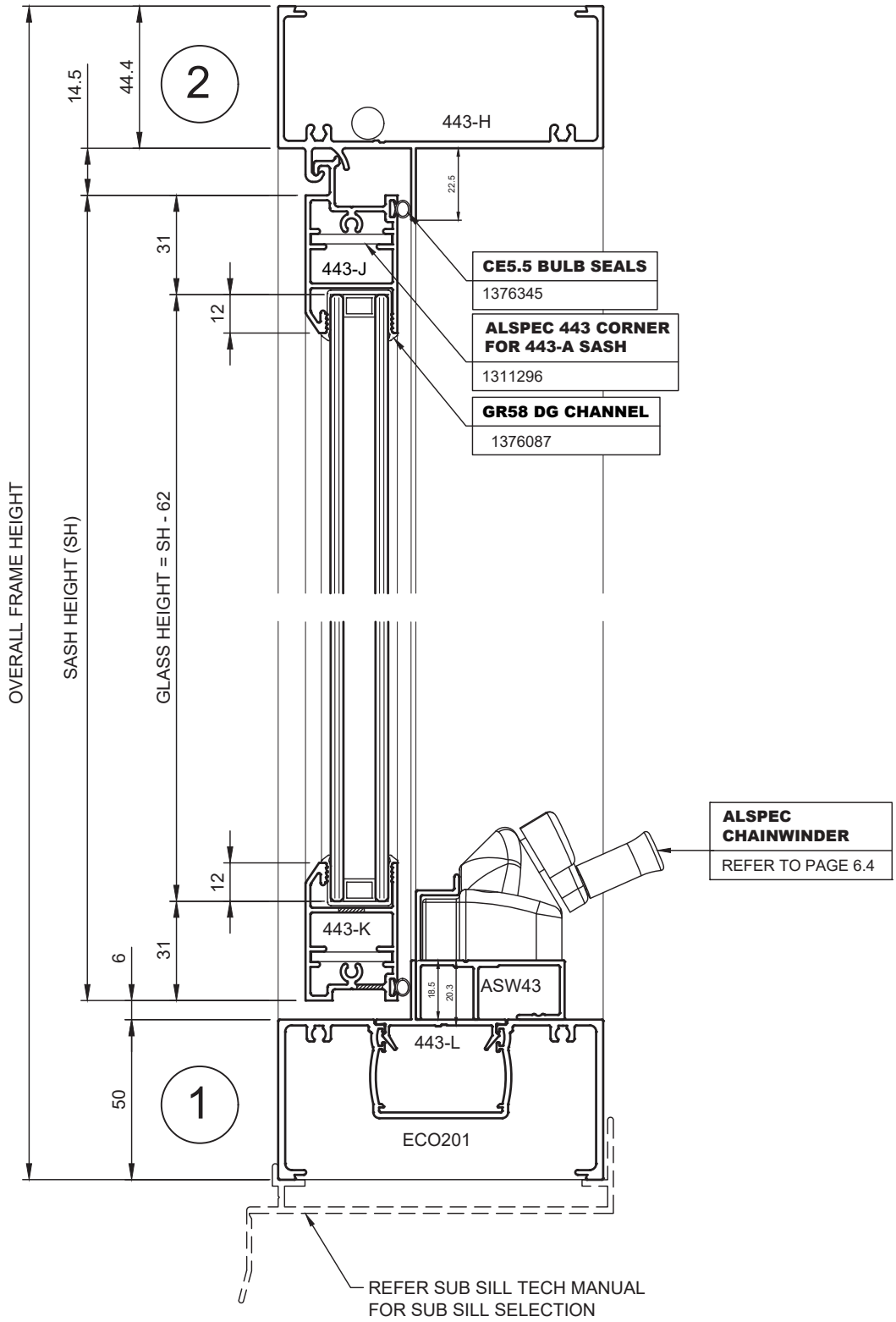

443 DG ecoFRAMEplus 101.6mm Jamb Detail

NOTE: ALL METAL TO METAL JOINTS UNLESS OTHERWISE NOTED ARE TO BE SEALED WATER TIGHT WITH A SMALL JOINT SEALER OR AN APPROVED SILICONE INCLUDE SASH ADAPTORS.

WELD ALL BULB SEAL MITRE JOINTS

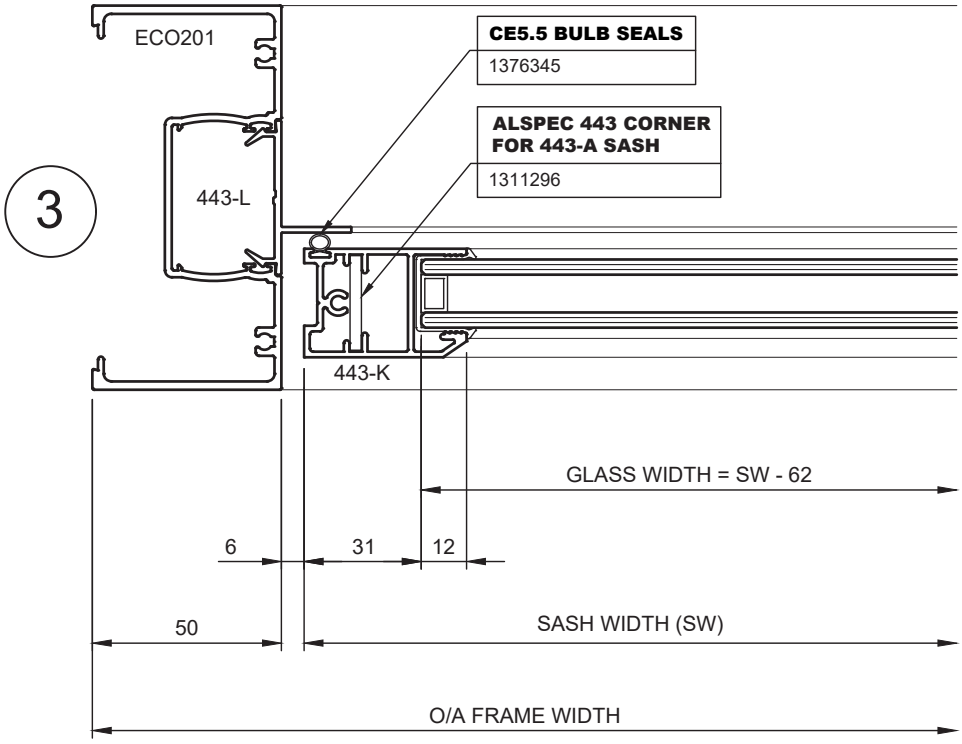

9. Cutting Formulas

Typical 443 Sash in Single Glazed Center Pocket Frames - 6mm Jamb Clearance

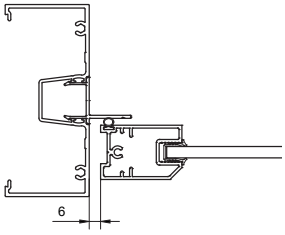

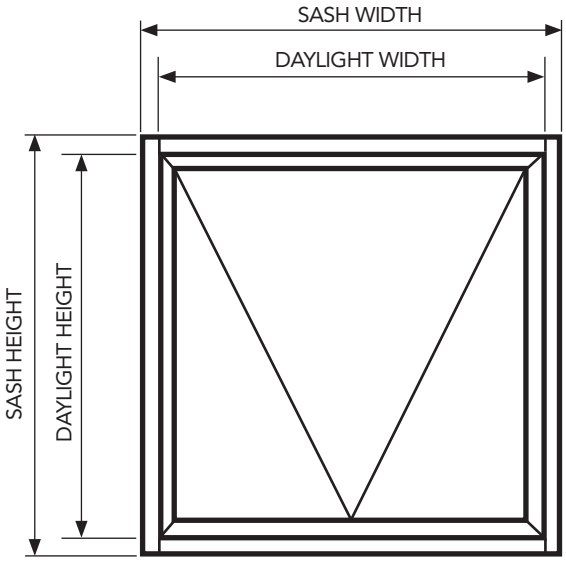

FORMULAS BASED OFF STANDARD 6mm GAP BETWEEN THE FRAME AND SASH

* Mitre cut

	PROFILE	SECTION NO.	DESCRIPTION	CUTTING FORMULA	QTY
*		ME33	Awning Adaptor	Daylight Width	2
*		443-B	Top Hung Awning Sash	Daylight Width - 12	1
*		443-A	Awning Sash	Daylight Width - 12	1
		ASW43	Awning Winder	Daylight Width	1
*		443-A	Awning Sash	Daylight Height - 20	2
*		ME33	Awning Adaptor	Daylight Height	2
	GLASS	HEIGHT		Sash Height - 70	1
		WIDTH		Sash Width - 70	

443-A SG Sash Bottom Rail Machining Details

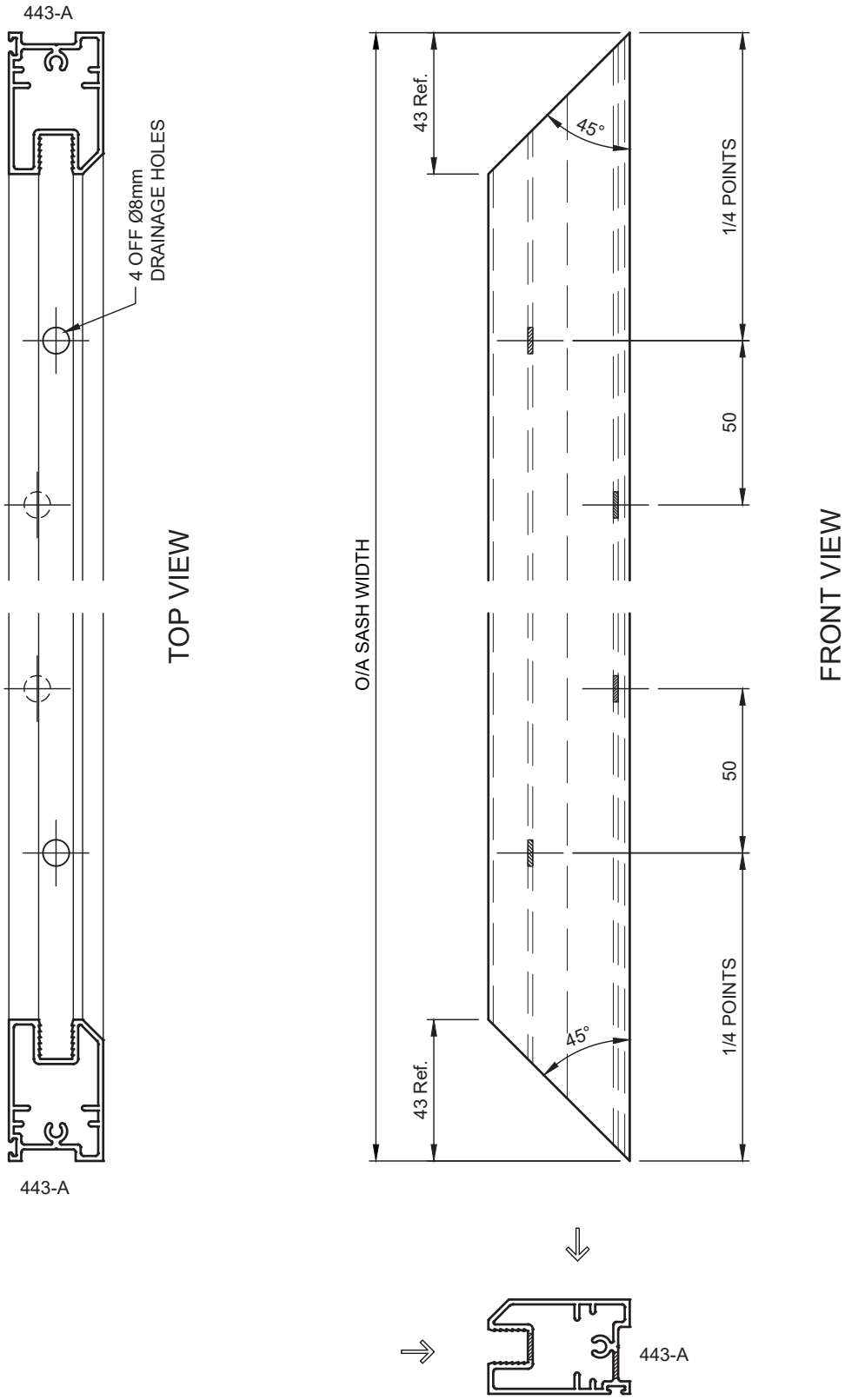

443-K DG Sash Bottom Rail Machining Details

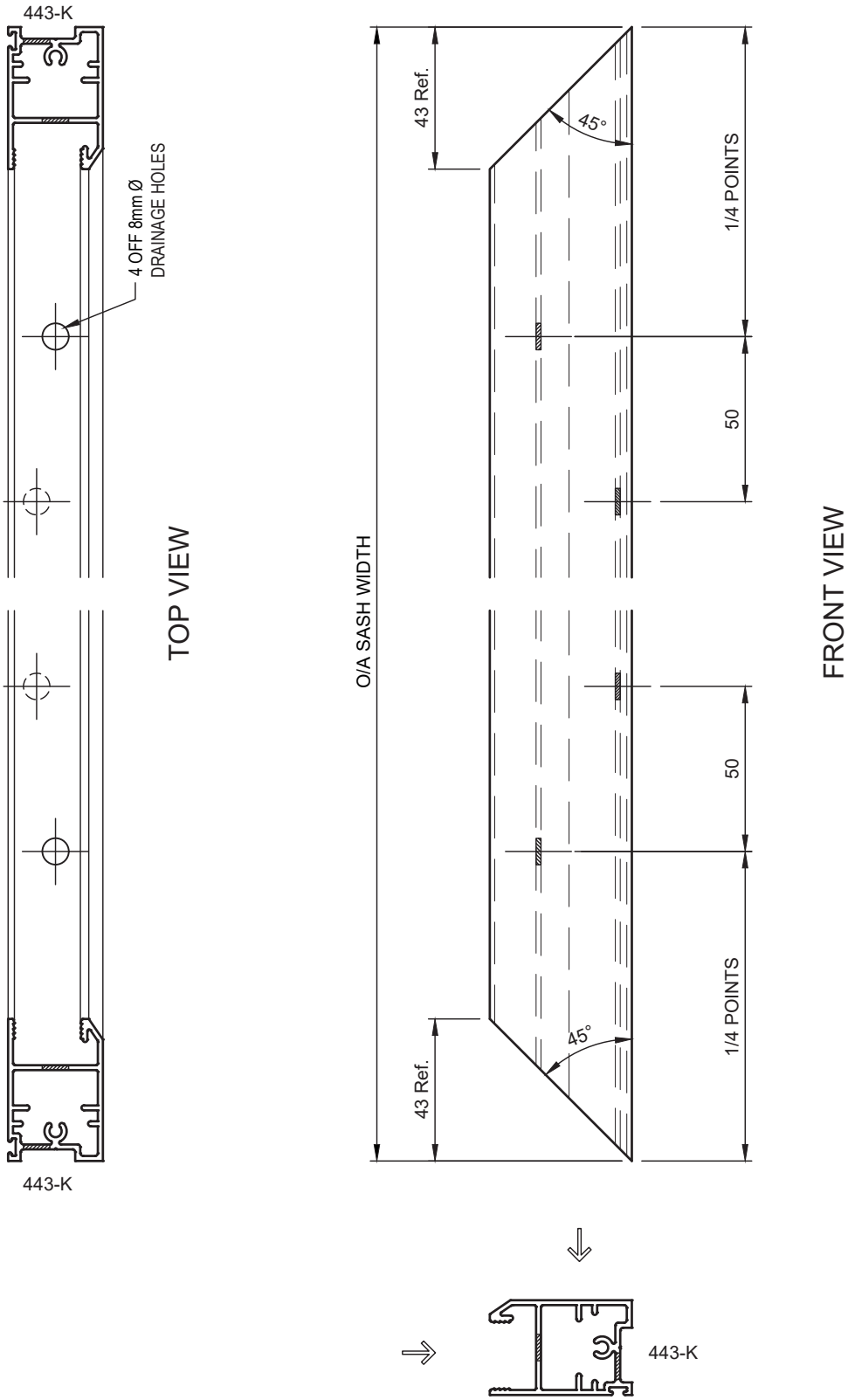

443-B SG Sash Top Rail Machining Details

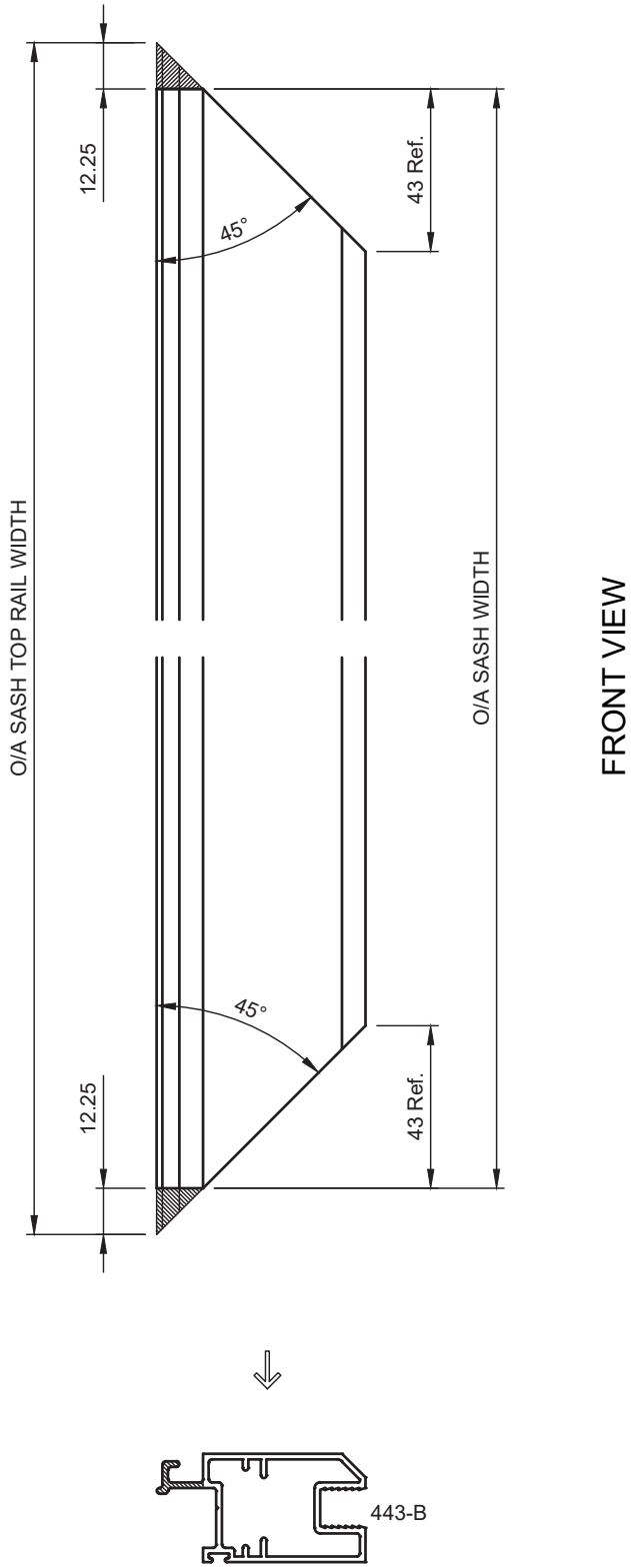

443-J DG Sash Top Rail Machining Details

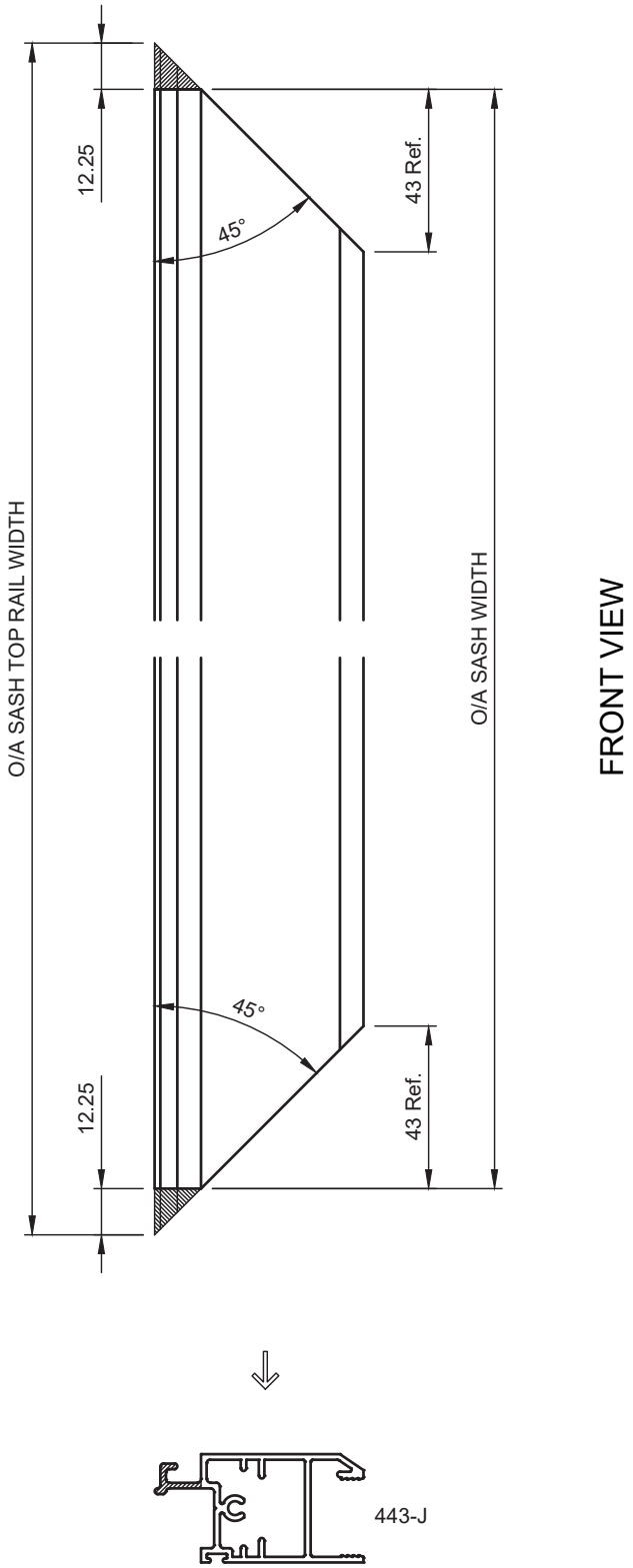

10. Manufacturing Details

McArthur Evo Frame Preparation

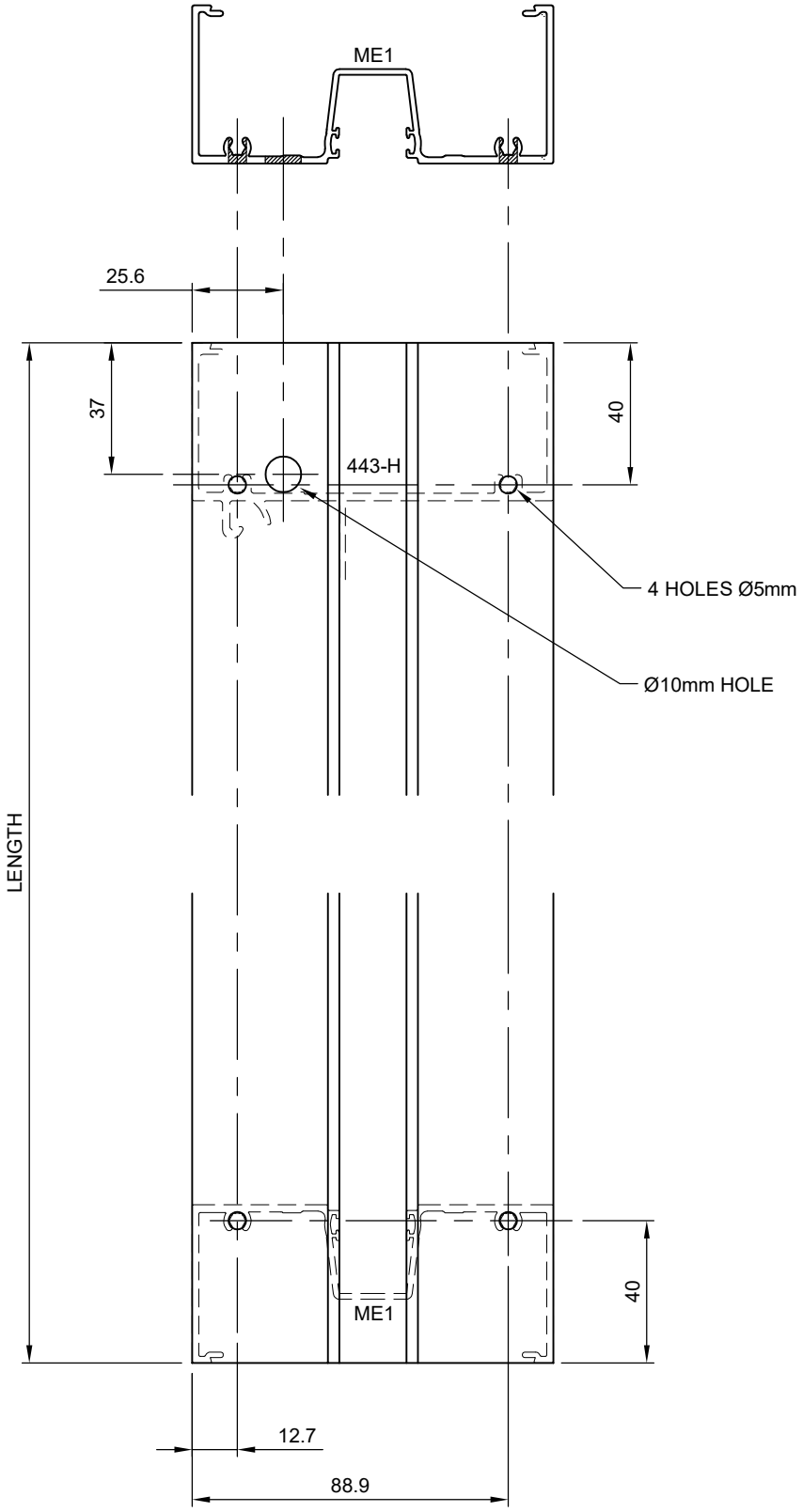

ecoFRAMEplus 101.6mm Frame Preparation

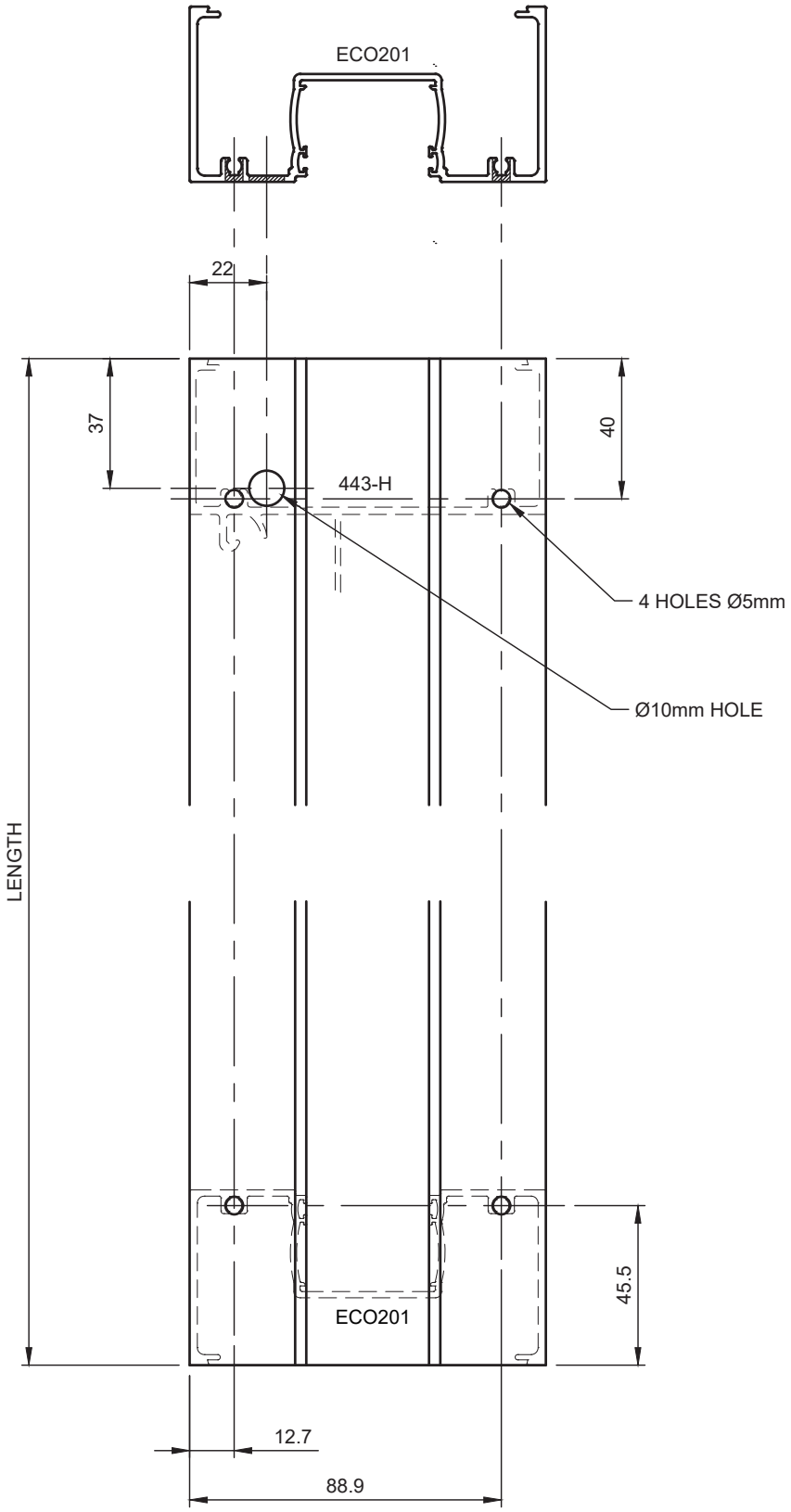

443-F Winder Adaptor Notch

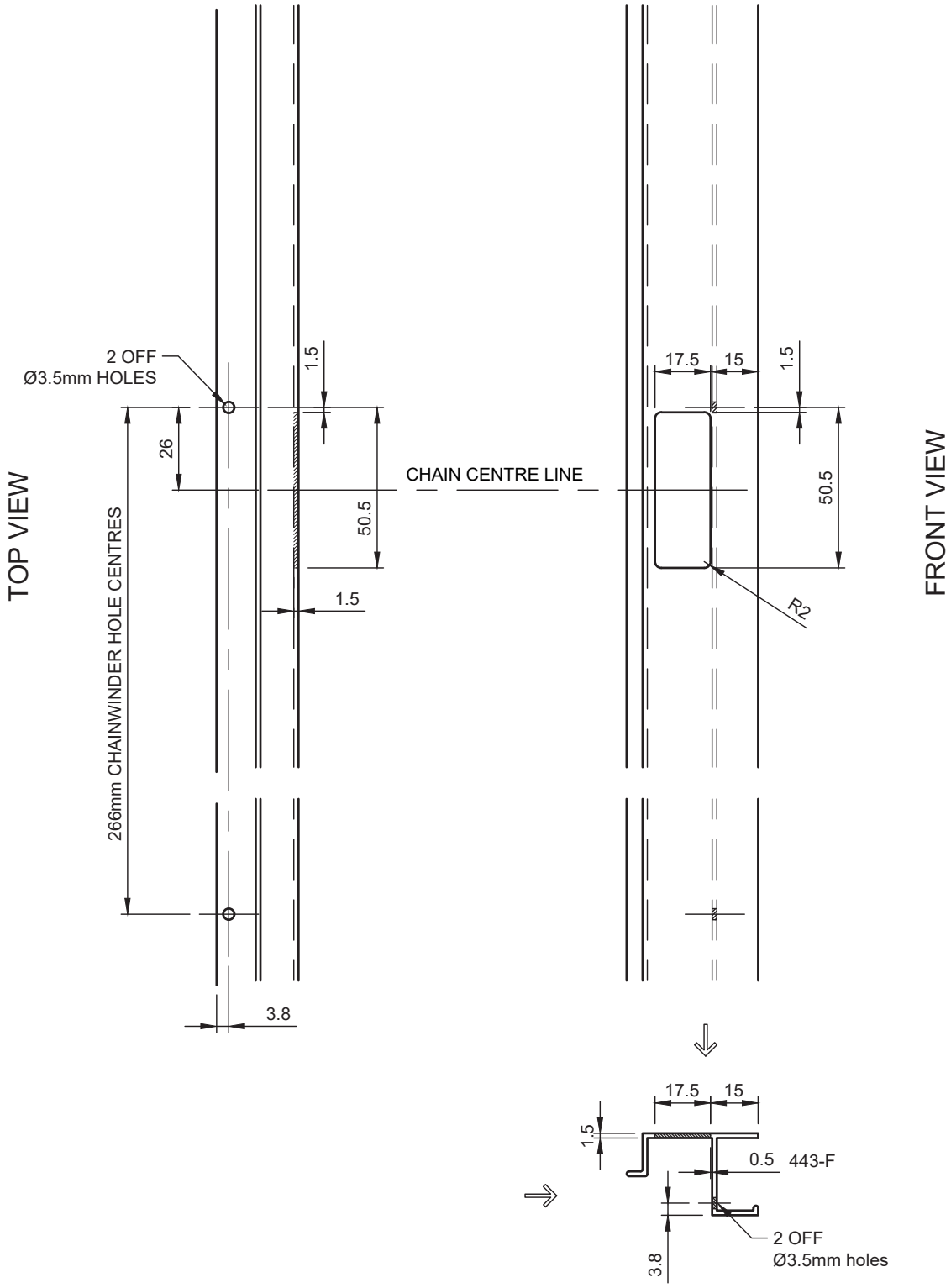

10. Manufacturing Details

ASW43 Awning Winder Machining

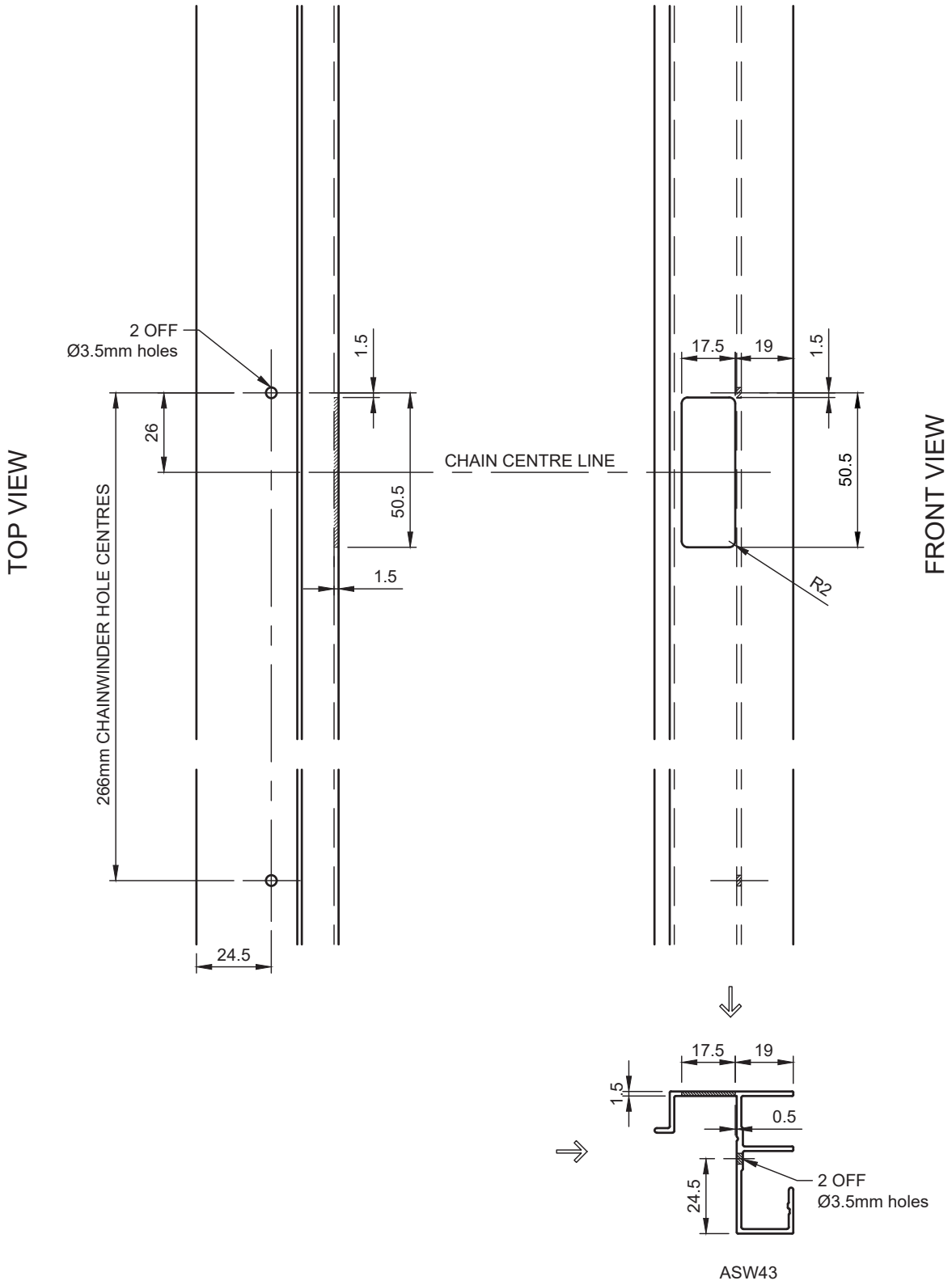

ME33 McArthur Evo Sash Adaptor Chain Winder Notch

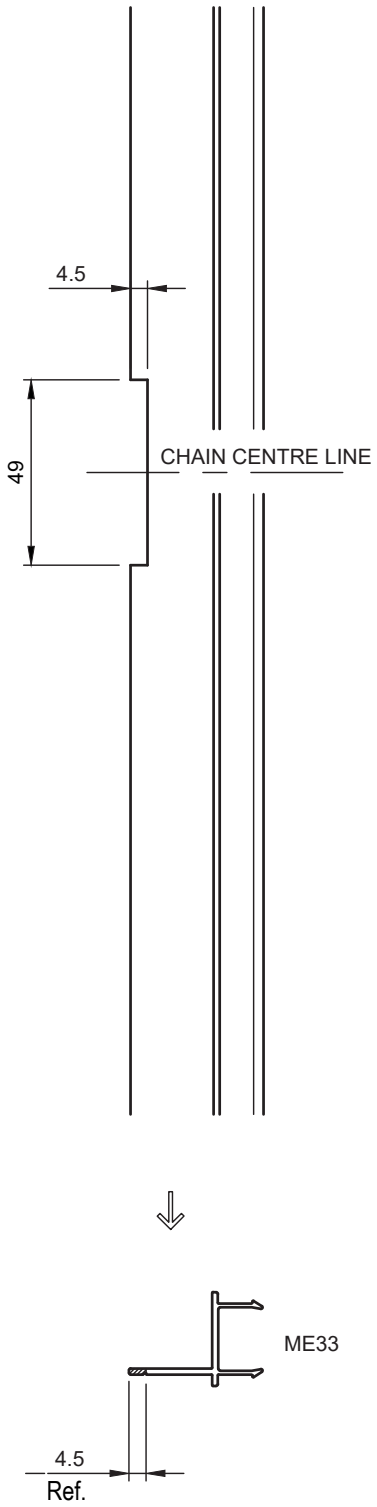

11. Assembly Details

McArthur Evo Framing & Transom Sealing Detail

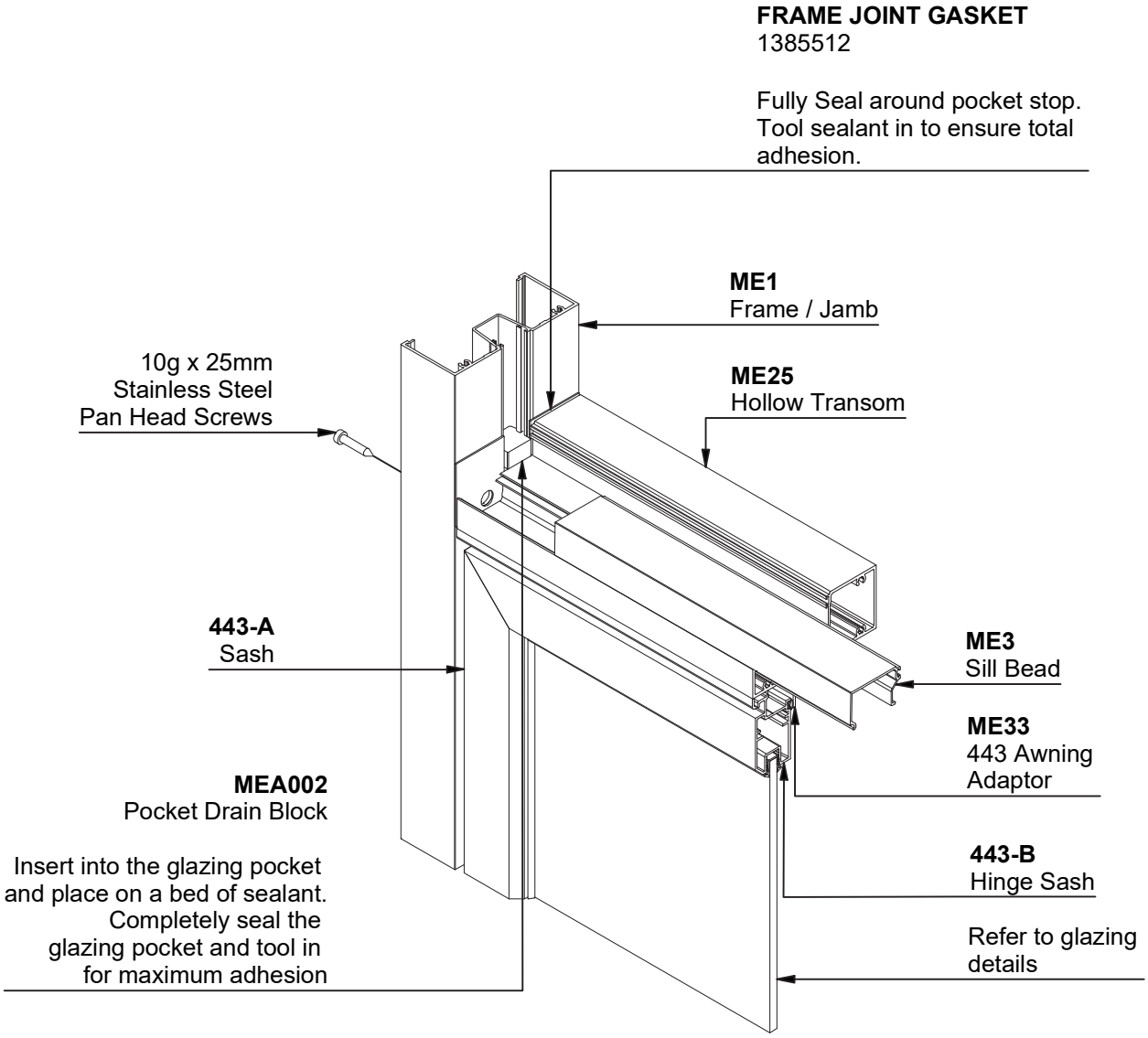

11. Assembly Details

30mm 443 Sash Corner Assembly

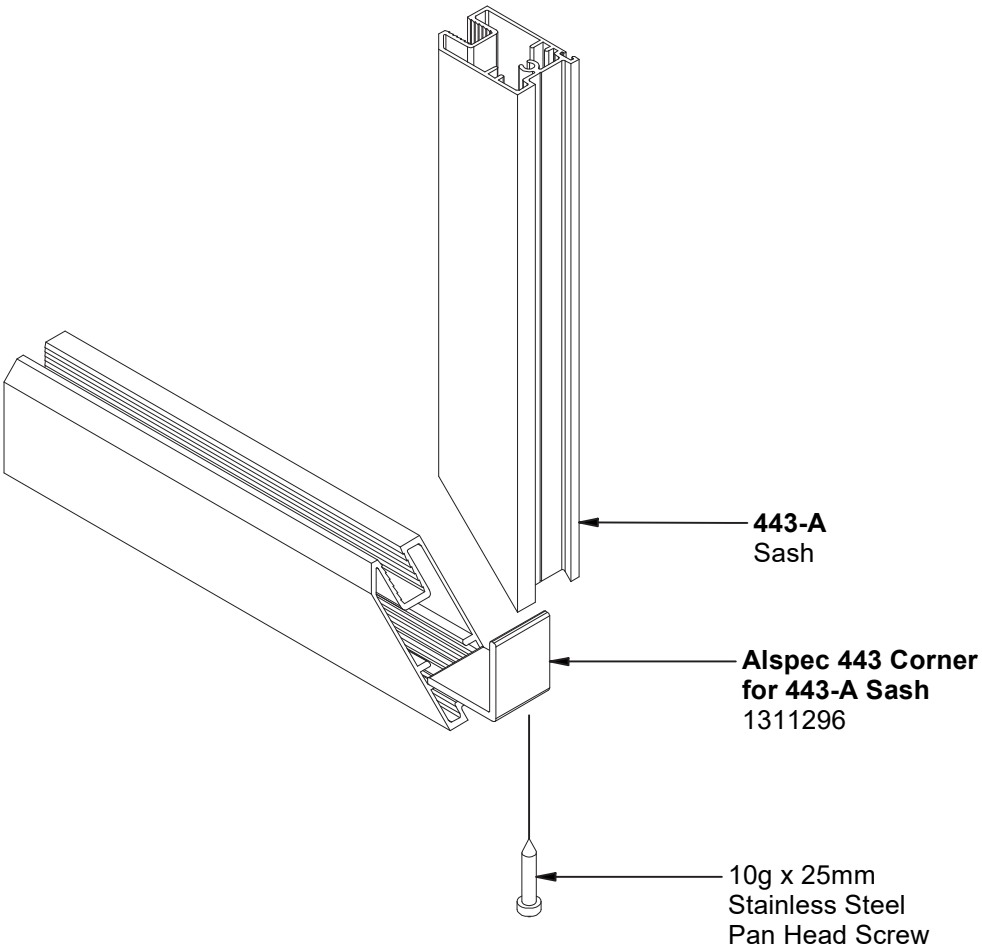

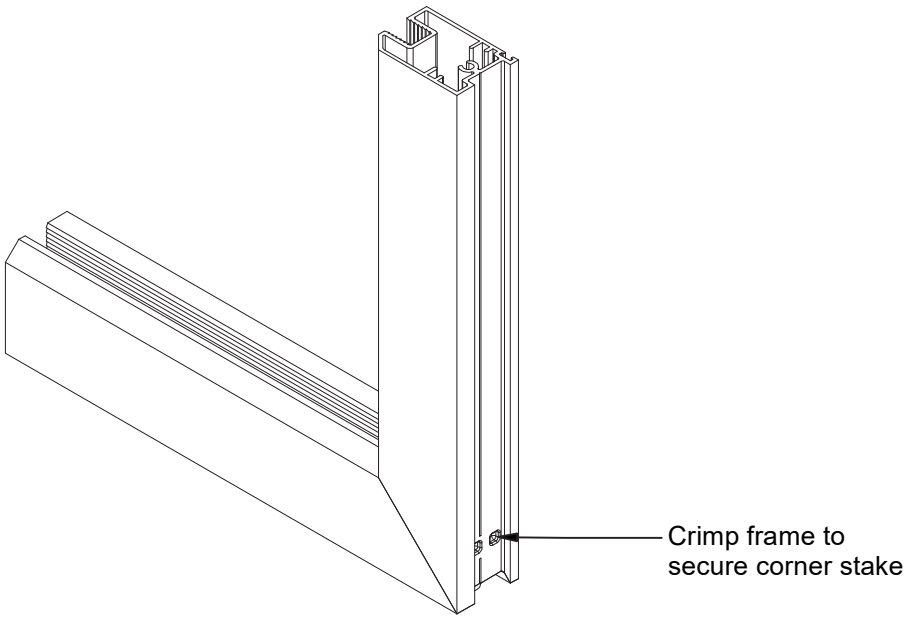

Glazing Details 443-A Single Glazed

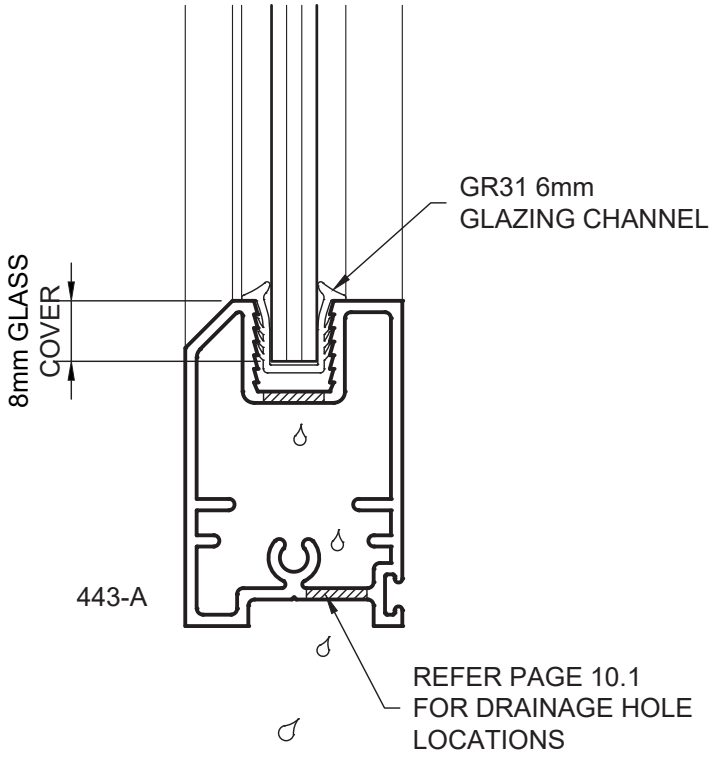

Glazing Details 443-K Double Glazed

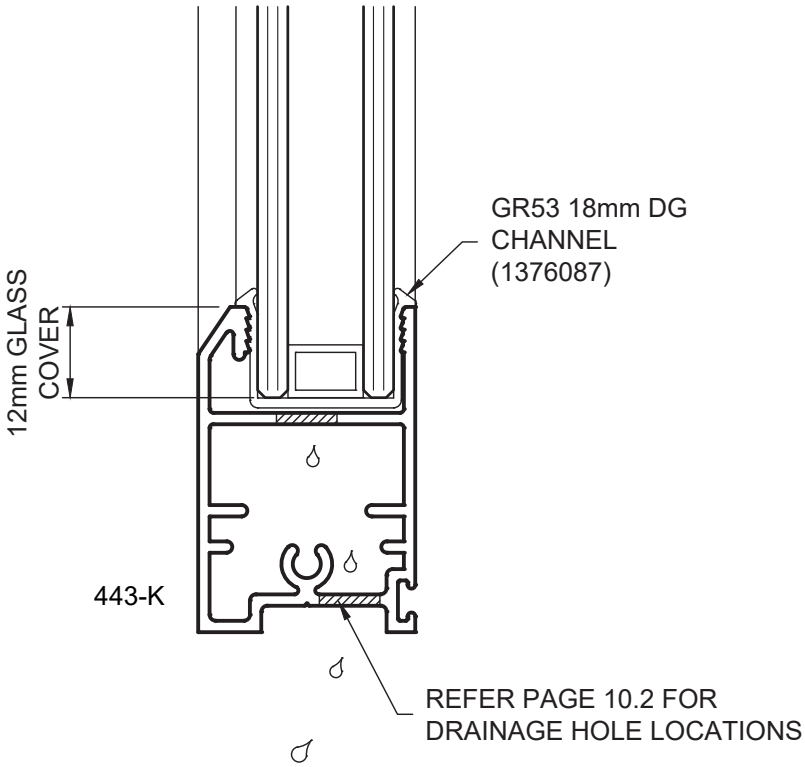

13. Care & Maintenance

FRAMING

Your new **30mm 443 Awning Window** frames have been manufactured using the highest quality materials available to the Architectural industry. Constructed from Architectural grade aluminium, these products are highly corrosion resistant and exceptionally strong. With a moderate amount of maintenance, the **30mm 443 Awning Window** frame will retain it's good looks and resist the elements for years to come.

The **30mm 443 Awning Window** frames are the product of extensive research and development and designed to resist corrosion and rusting, but as with all external elements on the building require some maintenance to keep them looking good and performing well. Depending on how harsh the environment elements are, the maintenance period will vary. Refer to recommended maintenance table below.

Your **30mm 443 Awning Window** frames should only ever need to be washed down with a soft bristled brush using warm water and mild detergent. Rinse well with fresh water and remove any detergent residue. Strong detergents and abrasive cleaners should never be used to clean the **30mm 443 Awning Window** frames as they may scratch or damage the surface finish.

MAINTENANCE PERIOD TABLE

ENVIRONMENT	RECOMMENDED MAXIMUM MAINTENANCE INTERVAL
Mild	Six Months
Moderate	Three Months
Tropical/Severe	One Month

Environmental Definitions:

Mild – Being rural, away from the coast and remote from industry and urban activity.

Moderate – Being mainly urban, inland and away from heavy industry.

Tropical – Being coastal/marine, subject to salt deposition and within 15km of the Eastern coast or 10km of the Western coast of Australia.

EVERYTHING ALUMINIUM & HARDWARE

SYDNEY
3 Alspec Place
Eastern Creek NSW 2766
Phone: 02 9834 9500
sydney@alspec.com.au

MELBOURNE
26–40 Pound Road West
Dandenong South VIC 3175
Phone: 03 8787 6333
melbourne@alspec.com.au

BRISBANE
8–22 Jutland Street
Loganlea QLD 4131
Phone: 07 3089 4900
brisbane@alspec.com.au

ADELAIDE
1 Pope Court
Beverley SA 5009
Phone: 08 8150 6960
adelaide@alspec.com.au

DARWIN
25 Bishop Street
Woolner NT 0820
Phone: 08 8941 7300
darwin@alspec.com.au

CANBERRA
28 Sheppard Street
Hume ACT 2620
Phone: 02 5134 3300
canberra@alspec.com.au

PERTH
30 Holder Way
Malaga WA 6090
Phone: 08 9209 9100
perth@alspec.com.au

NEWCASTLE
95 Griffiths Road
Lambton NSW 2299
Phone: 02 4952 9111
newcastle@alspec.com.au

BRENDALE
24 Doherty Street
Brendale QLD 4500
Phone: 07 3205 9911
brendale@alspec.com.au

SUNSHINE COAST
4-8 Empire Crescent
Chevallum QLD 4555
Phone: 07 5437 6123
sunshinecoast@alspec.com.au

TOWNSVILLE
21 Carroll Street
Mount Louisa QLD 4814
Phone: 07 3089 4965
townsville@alspec.com.au

CAIRNS
34–38 Hargreaves Street
Edmonton QLD 4869
Phone: 07 4037 6666
cairns@alspec.com.au

BUNDABERG
17 Production Street
Svensson Heights QLD 4670
Phone: 07 4111 2000
bundaberg@alspec.com.au

CARRUM DOWNS
99 Frankston Gardens Drive
Carrum Downs VIC 3201
Phone: 03 9775 1223
carrumdowns@alspec.com.au

All pictures shown in this catalgoue are for illustration purposes only. Actual product may vary due to product enhancement.