Hunter Evo
Flush Glazed Acoustic Framing

Hunter Evo
150mm Flush Glazed Acoustic Framing

Technical Manual

March 2024 | ISSUE C

alspec®
EVERYTHING ALUMINIUM & HARDWARE

COPYRIGHT

This Technical manual remains the property of Aluminium Specialties Group Pty Limited and contains privileged information which is the subject of copyright and the manual or any part thereof may not be reproduced, copied or loaned in any form without the written permission of Aluminium Specialties Group Pty Limited.

This manual is to be returned to Aluminium Specialties Group Pty Limited when requested.

DISCLAIMER

Whilst every effort has been made to ensure the technical details contained within this manual are accurate, Aluminium Specialties Group Pty Limited can take no responsibilities for any loss or damage whatsoever arising as a result of any errors contained in this manual.

Also, interpretation of standards or codes within this manual is Aluminium Specialties Group Pty Limited interpretation for such codes. Responsibility for code compliance remains with the user of this manual. In some cases product dimensions may vary or be changed without notice. The user of this manual should not act or rely upon on any information contained in this manual without first obtaining appropriate professional advice relating to their particular circumstances.

Aluminium Specialties Group Pty Limited disclaims all liability for loss or damage suffered by any party who acts or fails to act in reliance of this manual.

Contents

1. TECHNICAL MANUAL RELEASE NOTES **1.1**

2. TECHNICAL SPECIFICATIONS **2.1**

3. LOADING TABLES **3.1**

Loading Table Guide 3.1
HE952 + HE953 Mullion Combination 3.2
HE954, HE309, AS55 Transom 3.3
AS2047 - Fixed/ Fixed 4.1
AS2047 - Fixed/ Fixed over Fixed/ Fixed 4.2
Acoustic - AS/NZS ISO 717.1 4.4

5. EXTRUSIONS **5.1**

6. HARDWARE & COMPONENTS **6.1**

Glazing Wedges 6.1
Backing Gaskets 6.1
Seals 6.2
Fasteners 6.2
Frame Joint Gaskets 6.2
Accessories 6.3
Desiccant 6.3
Silicone 6.4
Silicone Product Codes 6.5

7. TYPICAL ELEVATION **7.1**

8. TYPICAL DETAILS **8.1**

Typical Head, Transom & Sill Details 8.1
Typical Jamb/ Mullion Details 8.2
Typical Door Head and Sill 8.3
Typical Door Jamb Details 8.4
Typical Head/Awning & Transom/Awning Detail 8.5
Typical Mullion Fixed/Awning Detail 8.6

10. MANUFACTURING DETAILS **10.1**

Jamb Preparation 10.1
Male Mullion Preparation 10.2
Female Mullion Preparation 10.3
Transom Drainage Preparation 10.4
Glazing Bead Drainage Preparation 10.5
Mullion Preparation for Door Jambs 10.6
Mullion Preparation for Awning Head 10.7

11. ASSEMBLY DETAILS **11.1**

Sill Assembly and Sealing Details 11.1
Transom Assembly and Sealing Details 11.2

12. GLAZING DETAILS **12.1**

Glazing Details - Captive 12.1

13. CARE & MAINTENANCE **13.1**

1. Technical Manual Release Notes

This page is intended to record all changes to the **HUNTER EVO 150mm FLUSH GLAZED ACOUSTIC FRAMING** technical manual pages.

Changes or additions to this manual will be itemised with a brief description and date when the amendments were made.

ISSUE	DATE	Amendment Description	Refer to Tech Memo #
A	11/2014	Technical manual intial release	
B	12/2019	Technical Manual Update & Re-release	354
C	05/2023	Added Acoustic Test Reports to Test Summary page 4.4	554

2. Technical Specifications

ALUMINIUM
Aluminium frames should be manufactred using Alspec's **HUNTER EVO 150mm FLUSH GLAZED ACOUSTIC FRAMING** system.

Refer to wind load tables for maximum panel heights and widths.

GLAZING
- Minimum glass thickness is 6mm
- Maximum glass thickness is 14mm
- Glazing wedges shall be Alspec's wedges for **HUNTER EVO 150mm FLUSH GLAZED ACOUSTIC FRAMING** to suit standard & captive glazing options, refer glazing page 12.1.

HARDWARE
The hardware shall be Alspec's specific backing gaskets and colour coded wedges for **HUNTER EVO 150mm FLUSH GLAZED ACOUSTIC FRAMING** system.
- All other hardware as per Alspec Technical Manual

FINISHES
- All powder coated material shall be produced to AS3715
- All anodised material shall be produced to AS1231

TESTING
Product shall have a test report to show compliance to AS2047.

All products are available from Alspec (A.B.N. 63 001 252 259) as detailed in the "Alspec" Catalogue or on the Internet at www.alspec.com.au . All such framing is to be constructed, assembled and fixed to meet the requirements of AS2047 (windows in buildings), AS1170 (loading code). All glass, glazing rubbers, seals and gaskets shall be applied in accordance with the requirements of AS1288 (glass in buildings – selection and installation).

Fabricators of the HUNTER EVO 150mm FLUSH GLAZED ACOUSTIC FRAMING system should seek confirmation of design wind pressure and deflection criteria from the building designer.

Loading Table Guide

The following pages contain wind pressure tables that may be used as a guide to the suitability of Alspec Aluminium Systems framing for various wind loads and frame sizes.

In most situations the Design Wind Pressure for a particular building should be available from the building designer or engineer.

Framing must be checked for suitability.

For a window / door frame, which is 2400mm high and 1000mm wide, refer to the table below;
Step 1: Locate the height
Step 2: Locate the width
Step 3: Determine the Maximum wind pressure based on the height and width.

SECTION PART NO.	Panel Height	Maximum Design Pressure (Pa)					
	2850	S	1040	840	720	630	570
		U	2410	1960	1660	1460	1310
	2700	S	1230	1000	850	750	680
		U	2700	2190	1870	1640	1480
	2550	S	1460	1200	1020	910	830
		U	3040	2470	2210	1860	1690
STEP 1	2400	S	1770	1450	1250	[illegible]	1010
		U	3440	2810	2410	[illegible]	1940
	2250	S	2160	1780	1530	1370	1270
		U	3940	3230	2780	2470	2270
	2100	S	2670	2210	1920	1730	1610
		U	4550	3750	3240	2900	2680
Ixx = xxx x xxx mm4	Panel Width		800	1000	1200	1400	1600

STEP 3

STEP 2

3. Loading Tables

HE952 + HE953 Mullion Combination

Max Stress = 110Mpa S = Serviceability limit state l/250 U = Ultimate limit state

HE952 + HE953 MULLION COMBINATION	Mullion Height		Maximum Design Pressure (Pa)						
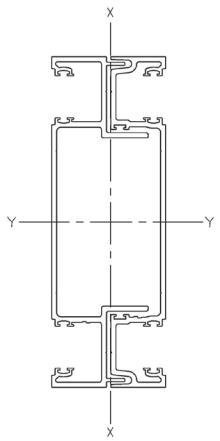	4500	S	1480	990	750	610	520		
		U	3680	2470	1870	1520	1290		
	4200	S	1820	1220	930	760	650	570	510
		U	4230	2840	2160	1750	1490	1310	1180
	3900	S	2280	1530	1170	960	820	720	660
		U	4910	3310	2510	2050	1750	1540	1390
	3600	S	2900	1960	1500	1230	1060	940	860
		U	5780	3890	2970	2430	2080	1840	1680
	3300	S	3000	2560	1960	1620	1400	1260	1160
		U	6890	4650	3560	2920	2520	2250	2060
	3000	S	3000	3000	2650	2200	1920	1740	1630
		U	8350	5660	4350	3590	3120	2810	2620
	2700	S	3000	3000	3000	3000	2730	2510	2400
		U	9000	7040	5450	4540	3980	3640	3450
	2400	S	3000	3000	3000	3000	3000	3000	3000
		U	9000	9000	7020	5920	5280	4940	4830
	2100	S	3000	3000	3000	3000	3000	3000	3000
		U	9000	9000	9000	8110	7430	7210	6950
	1800	S	3000	3000	3000	3000	3000	3000	3000
		U	9000	9000	9000	9000	9000	9000	9000
Ixx = 3797 x 10^3 mm^4	**Mullion Spacing**		**600**	**900**	**1200**	**1500**	**1800**	**2100**	**2400**

Tables are based on theoretical section properties

HE954, HE309, AS55 Transom

Max Stress = 110Mpa | S = Serviceability limit state l/250 | U = Ultimate limit state

HE954, HE309, AS55 TRANSOM	Transom Centres		Maximum Design Loads (Pa)					
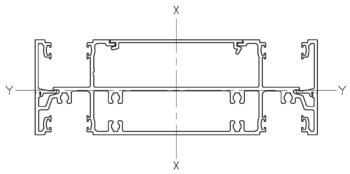	2400	S	3000	3000	3000			
		U	9000	9000	6400			
	2100	S	3000	3000	3000	3000		
		U	9000	9000	6500	4200		
	1800	S	3000	3000	3000	3000		
		U	9000	9000	6670	4320		
	1500	S	3000	3000	3000	3000		
		U	9000	9000	6940	4720		
	1200	S	3000	3000	3000	3000	3000	
		U	9000	9000	7830	5500	4090	
	900	S	3000	3000	3000	3000	3000	2760
		U	9000	9000	9000	6960	5250	4100
	Max Kg		200	200	125	80	50	35
Ixx = 2145 x 10^3 mm^4 Iyy = 178 x 10^3 mm^4	Transom length		1200	1500	1800	2100	2400	2700

Tables are based on theoretical section properties

Maximum glass weights have been determined to limit deflection to 5mm, using setting block locations at 1/8 points.

4. Test Summary

AS2047 - Fixed/ Fixed

TEST REPORT:	AS13.218
SYSTEM CONFIGURATION	HUNTER EVO 150mm ACOUSTIC FRAME F/F WITH HE952/ HE953 MULLIONS, AS954 SILL, AS606S, SUBSILL
TEST SAMPLE SIZE	2700 H x 2400 W
SERVICEABILITY LOAD	+/- 3031 Pa
ULTIMATE LOAD	+/- 3910 Pa
WATER PENETRATION	500 Pa
AIR INFILTRATION	75Pa + 0.2 L/s/ms² - 0.17 L/s/ms²

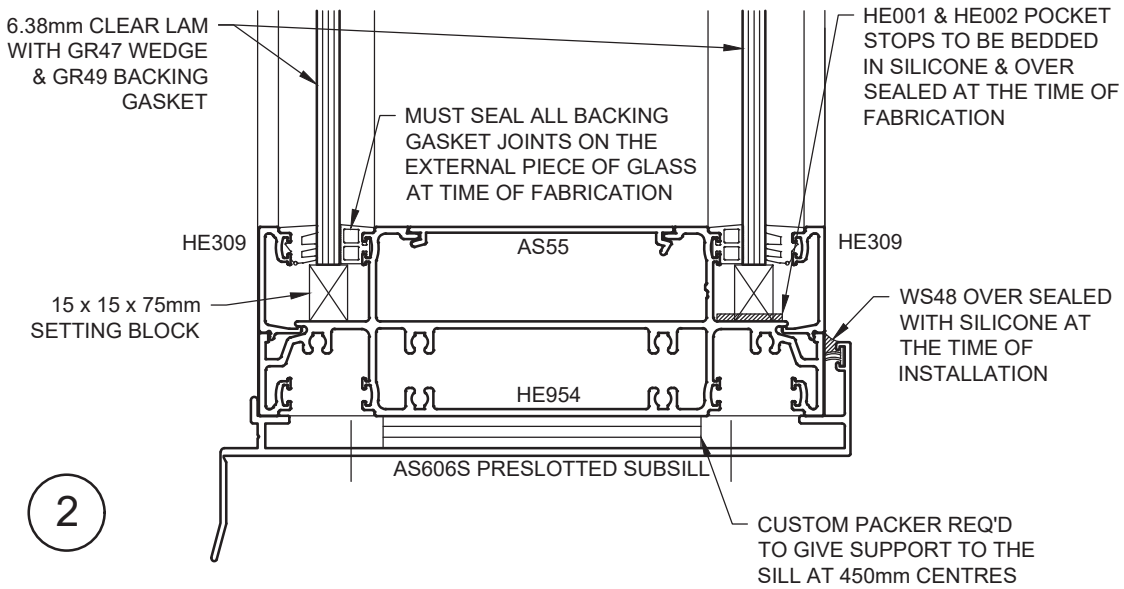

DISCLAIMER:
Please note that the test results shown above reflect specific configurations of a system and are representative only. If a specific high wind load or a different configuration (i.e. changes to frames, transoms, mullions) is required on a project please discuss with Alspec prior to commencement.

4. Test Summary

AS2047 - Fixed/ Fixed over Fixed/ Fixed

TEST REPORT:	AS13.219
SYSTEM CONFIGURATION	HUNTER EVO 150mm ACOUSTIC FRAME F-F/F-F WITH HE952/ HE953 MULLIONS, HE954 SILL & TRANSOM, AS606S SUB SILL
TEST SAMPLE SIZE	2700 H x 2400 W
SERVICEABILITY LOAD	+/- 3011 Pa
ULTIMATE LOAD	+/- 4527 Pa
WATER PENETRATION	500 Pa
AIR INFILTRATION	75Pa + 0.22 L/s/ms² - 0.46 L/s/ms²

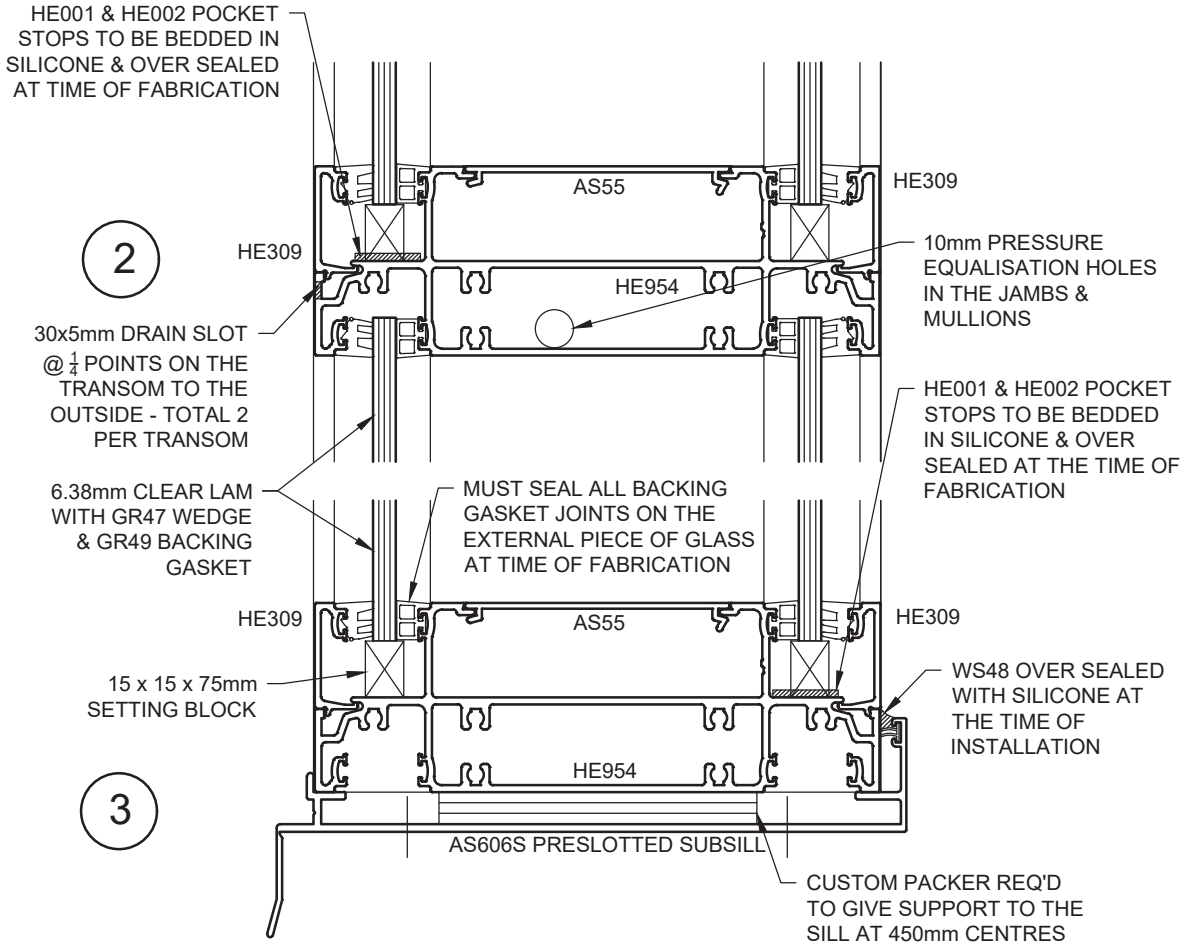

DISCLAIMER:
Please note that the test results shown above reflect specific configurations of a system and are representative only. If a specific high wind load or a different configuration (i.e. changes to frames, transoms, mullions) is required on a project please discuss with Alspec prior to commencement.

4. Test Summary

AS2047 - Fixed/ Fixed

TEST REPORT:	AS18.360
SYSTEM CONFIGURATION	HUNTER EVO 150mm ACOUSTIC FRAME F/F WITH HE952/HE953 MULLIONS, HE954 SILL & TRANSOM, AS606S SUB SILL, AS607 SUB HEAD
TEST SAMPLE SIZE	3040 H x 2400 W
WATER PENETRATION	1203 Pa

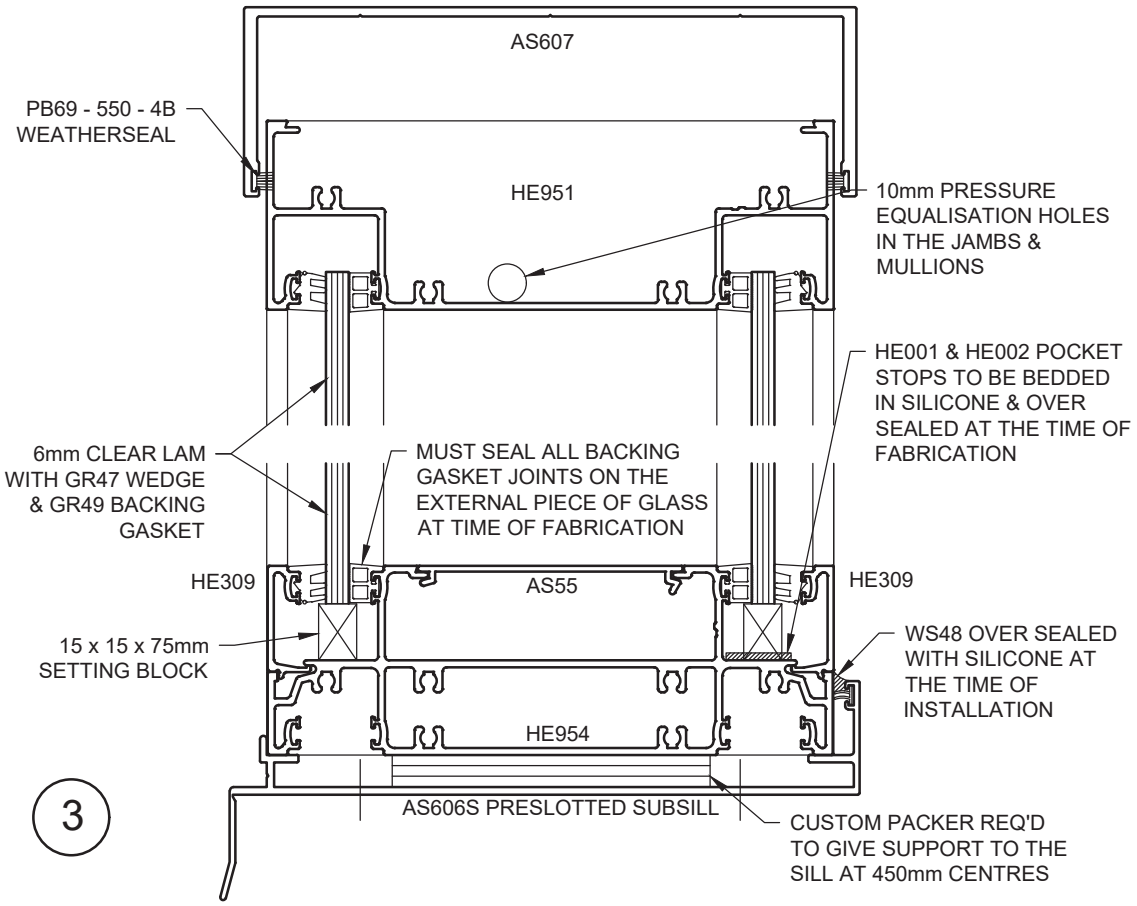

DISCLAIMER:
Please note that the test results shown above reflect specific configurations of a system and are representative only. If a specific high wind load or a different configuration (i.e. changes to frames, transoms, mullions) is required on a project please discuss with Alspec prior to commencement.

4. Test Summary

Acoustic - AS/NZS ISO 717.1

TEST REPORT	PRODUCT DESCRIPTION	SIZE	GLASS	Rw
14-109	HUNTER EVO ACOUSTIC FRAME - F/F	2.1m (H) x 1.8m (W)	12.5mm Hush/ 103mm Air Space/ 6.38mm Laminate	48
OT.AC23-07	HUNTER EVO ACOUSTIC FRAME - F/F	2.1m (H) x 1.8m (W)	12.5 Acousta/ 99mm Air Space/ 12.5 Acousta	50
OT.AC23-08	HUNTER EVO ACOUSTIC FRAME - F/F	2.1m (H) x 1.8m (W)	12.5 Acousta/ 99mm Air Space/ 12.38 Lam	49
OT.AC23-09	HUNTER EVO ACOUSTIC FRAME - F/F	2.1m (H) x 1.8m (W)	12.5 Acousta/ 99mm Air Space/ 10.38 Lam	48
OT.AC23-10	HUNTER EVO ACOUSTIC FRAME - F/F	2.1m (H) x 1.8m (W)	12.5 Acousta/ 99mm Air Space/ 10.5 Acousta	50
OT.AC23-11	HUNTER EVO ACOUSTIC FRAME - F/F	2.1m (H) x 1.8m (W)	12.38 Lam/ 99mm Air Space/ 10.5 Acousta	48
OT.AC23-12	HUNTER EVO ACOUSTIC FRAME - F/F	2.1m (H) x 1.8m (W)	10.5 Acousta/ 99mm Air Space/ 10.38 Lam	49
OT.AC23-13	HUNTER EVO ACOUSTIC FRAME - F/F	2.1m (H) x 1.8m (W)	6.38 Lam/ 107mm Air Space/ 6 Toughened	45
OT.AC23-14	HUNTER EVO ACOUSTIC FRAME - F/F	2.1m (H) x 1.8m (W)	6.38 Lam/ 107mm Air Space/ 4 Toughened	45
OT.AC23-15	HUNTER EVO ACOUSTIC FRAME - F/F	2.1m (H) x 1.8m (W)	6.5 Acousta/ 107mm Air Space/ 6.38 Lam	47
OT.AC23-16	HUNTER EVO ACOUSTIC FRAME - F/F	2.1m (H) x 1.8m (W)	6.5 Acousta/ 100mm Air Space/ 6.5 Acousta	48
OT.AC23-17	HUNTER EVO ACOUSTIC FRAME - F/F	2.1m (H) x 1.8m (W)	6 Toughened/ 107mm Air Space/ 4 Toughened	44
OT.AC23-18	HUNTER EVO ACOUSTIC FRAME - F/F	2.1m (H) x 1.8m (W)	6.38 Lam/ 107mm Air Space/ 6.38 Lam	45

5. Extrusions

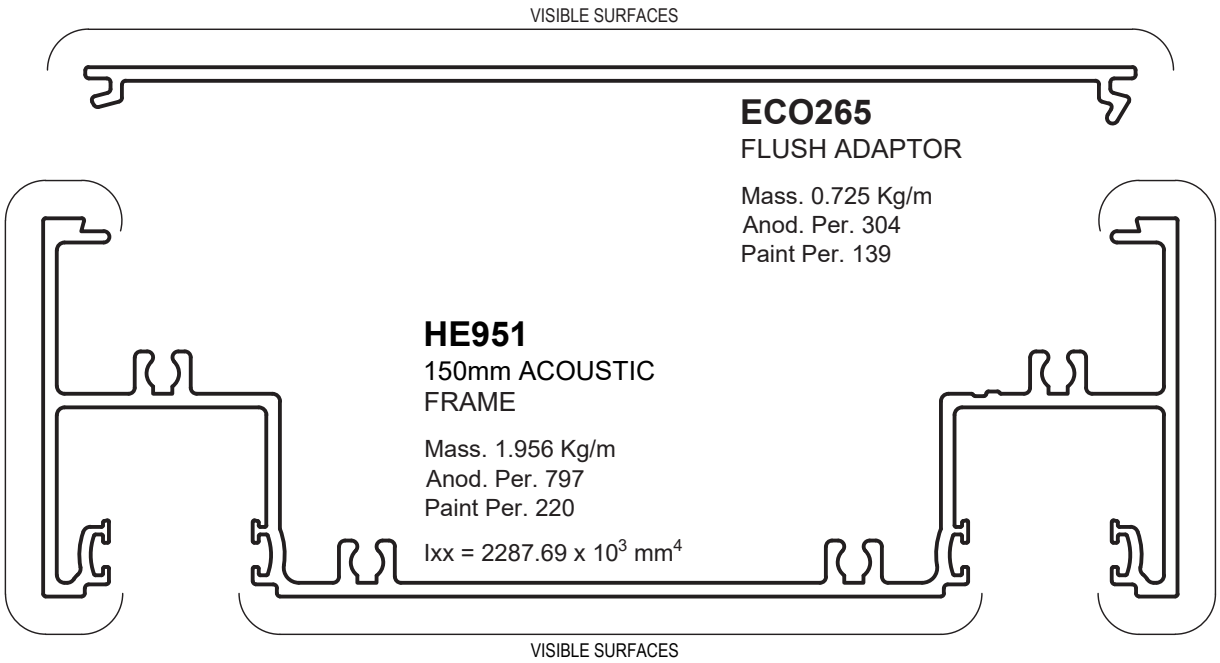

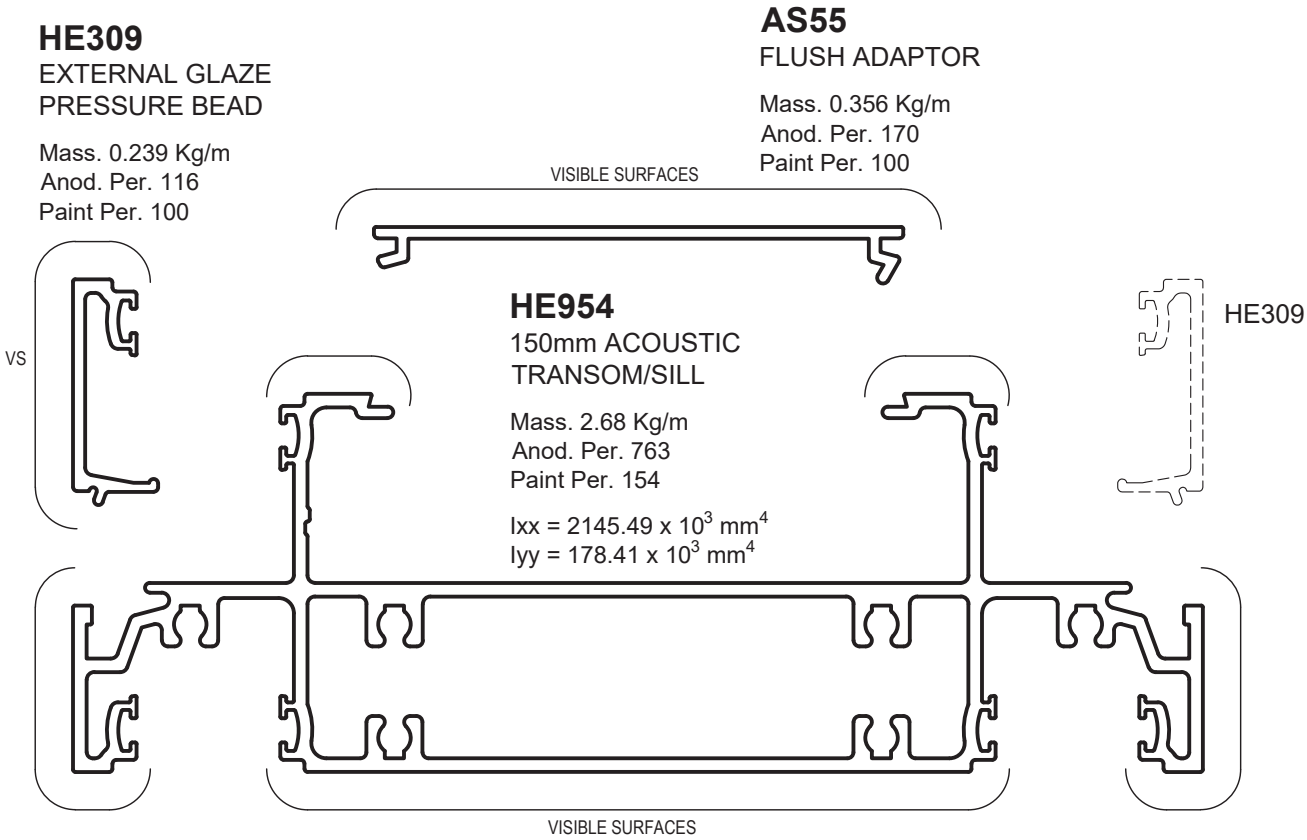

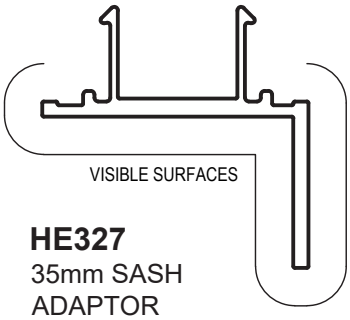

HE327
35mm SASH
ADAPTOR

Mass. 0.395 Kg/m
Anod. Per. 171
Paint Per. 100

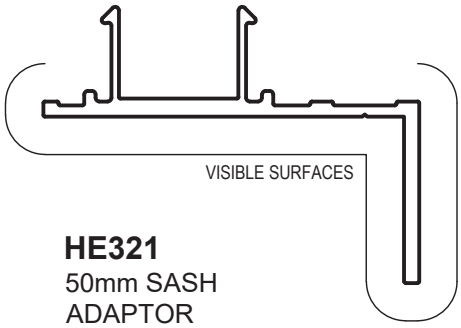

HE321
50mm SASH
ADAPTOR

Mass. 0.470 Kg/m
Anod. Per. 205
Paint Per. 100

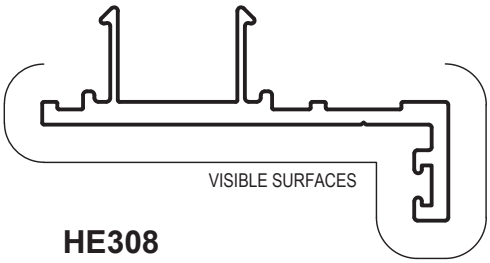

HE308
45mm DOOR STOP

Mass. 0.579 Kg/m
Anod. Per. 212
Paint Per. 100

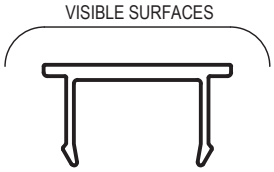

ME8
POCKET FILLER

Mass. 0.181 Kg/m
Anod. Per. 100
Paint Per. 100

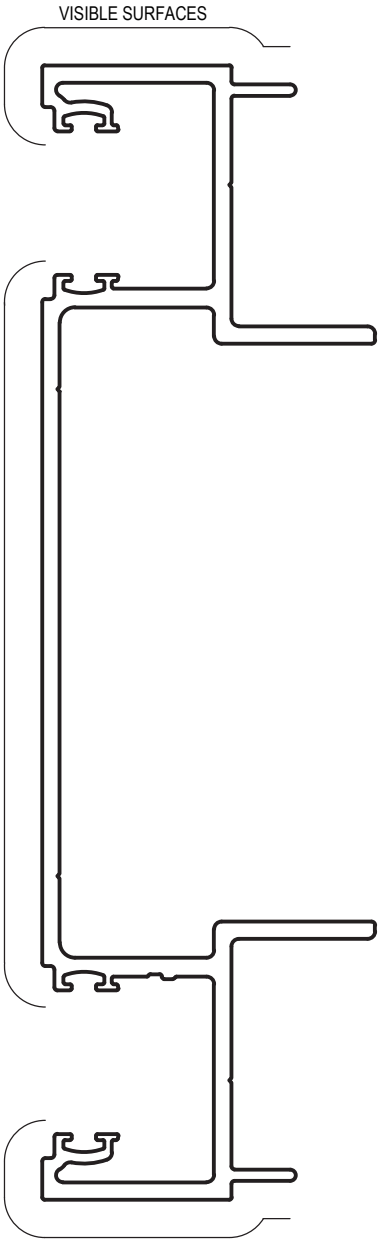

HE952
150mm ACOUSTIC
MALE MULLION

Mass. 2.042 Kg/m
Anod. Per. 700
Paint Per. 157

Ixx = 1996.54 x 10^3 mm^4

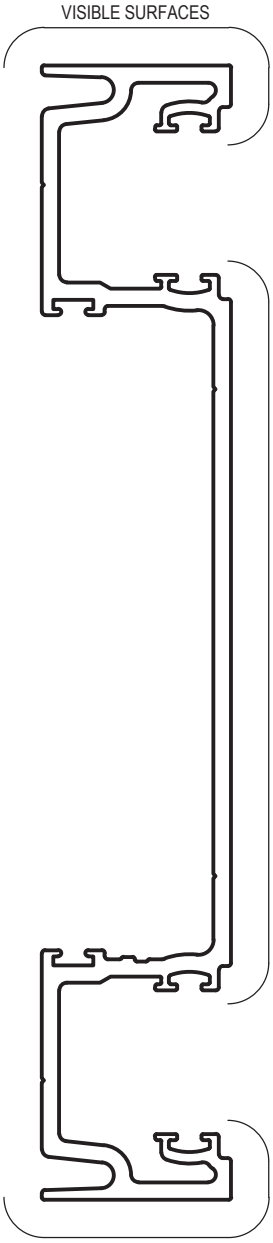

HE953
150mm ACOUSTIC
FEMALE MULLION

Mass. 1.758 Kg/m
Anod. Per. 619
Paint Per. 156

Ixx = 1800.93 x 10^3 mm^4

5. Extrusions

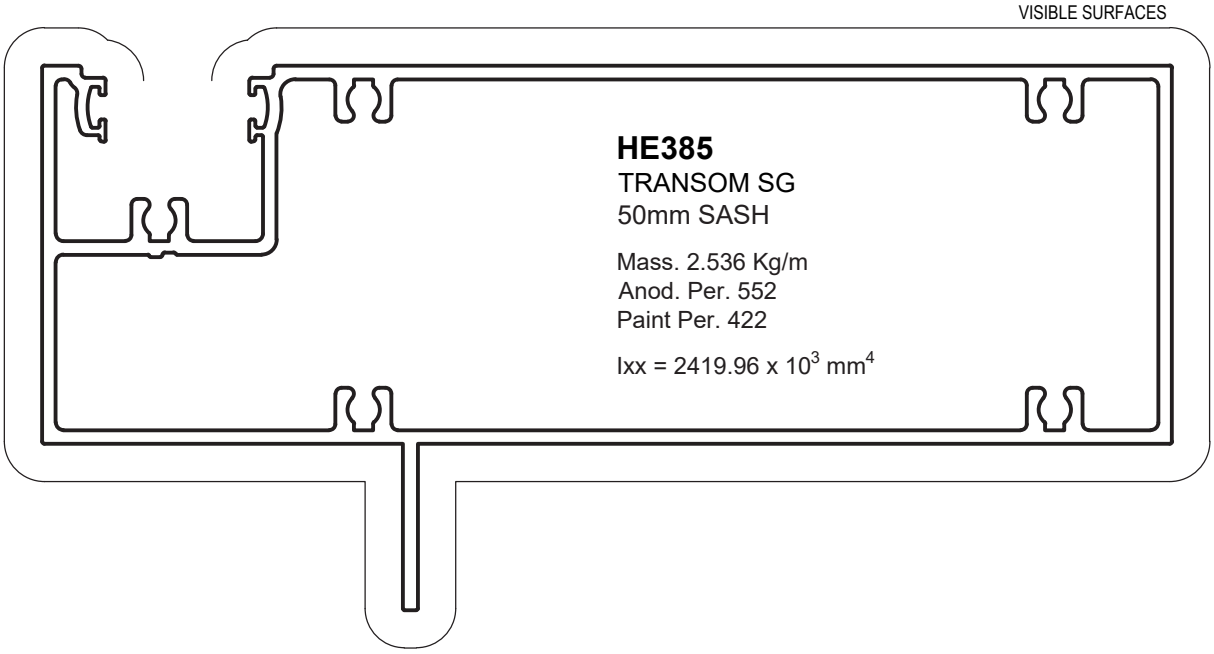

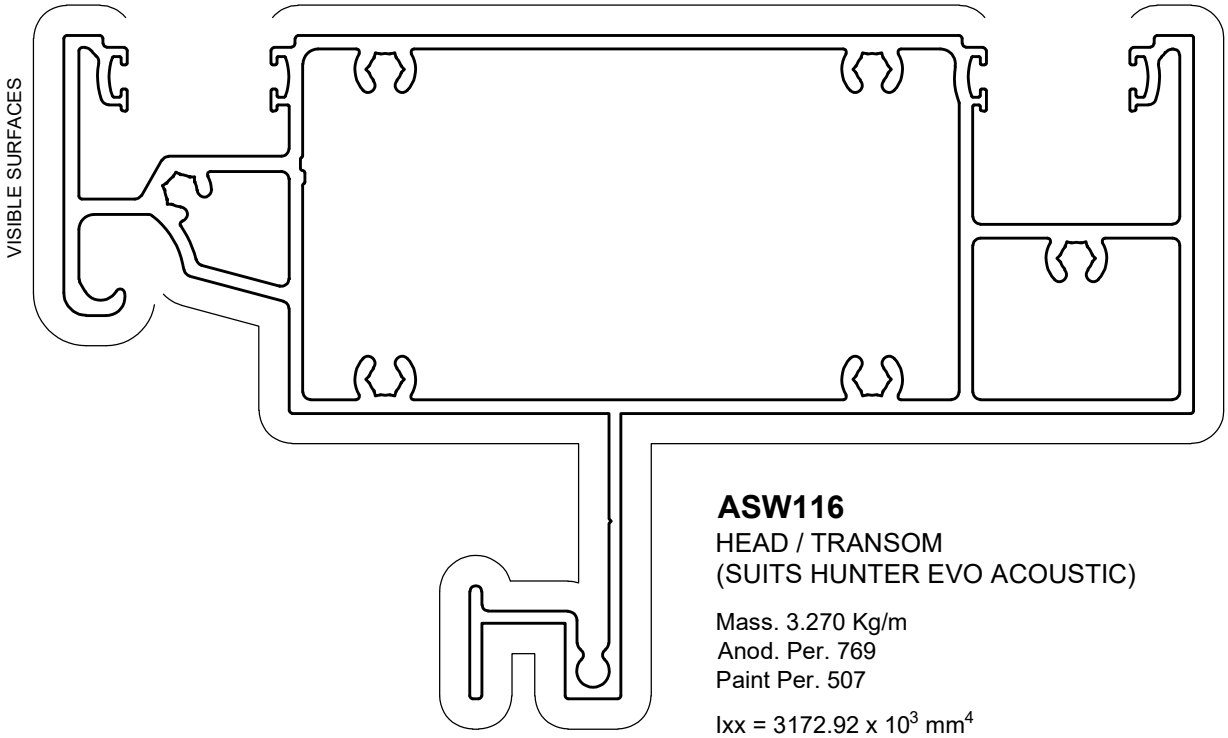

ASW116
HEAD / TRANSOM
(SUITS HUNTER EVO ACOUSTIC)

Mass. 3.270 Kg/m
Anod. Per. 769
Paint Per. 507

Ixx = 3172.92 x 10^3 mm^4

ASW117
SILL/TRANSOM
(SUITS HUNTER EVO ACOUSTIC)

Mass. 3.151 Kg/m
Anod. Per. 821
Paint Per. 511

Ixx = 2573.06 x 10^3 mm^4

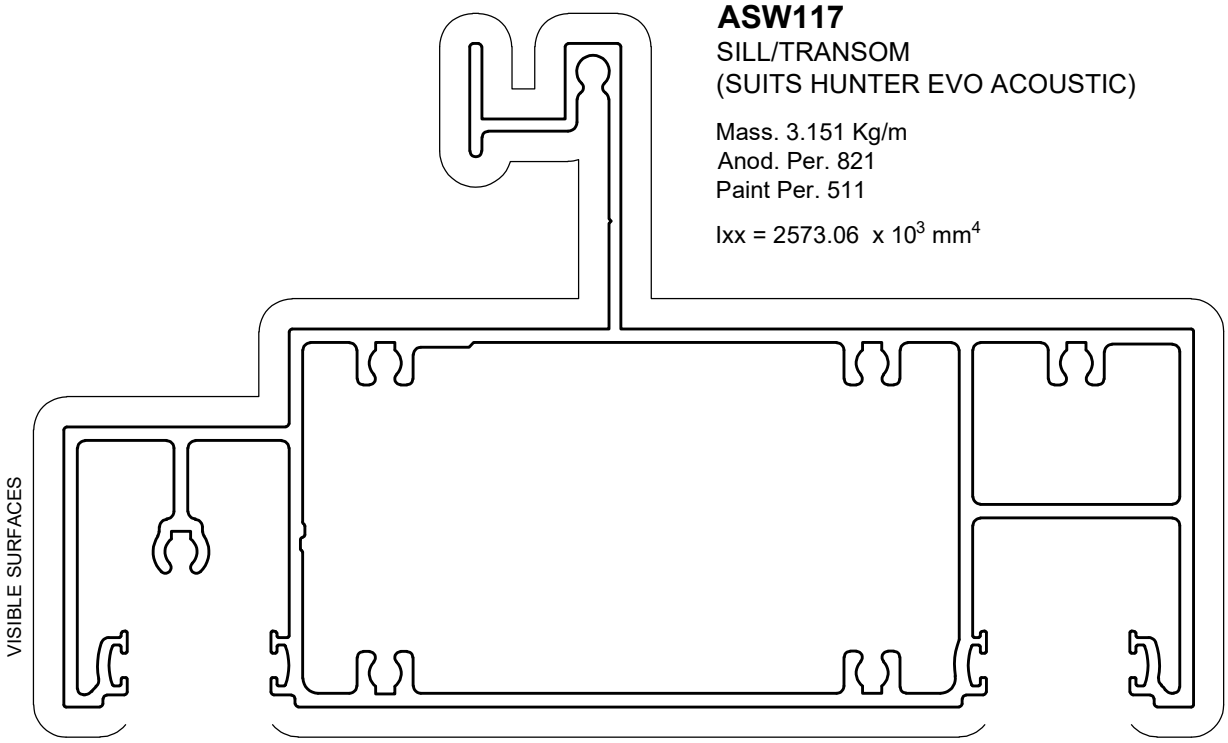

Glazing Wedges

IMAGE	TO SUIT GAP	MATERIAL	PART #	DESCRIPTION
	3mm	PVC	1313055	GR43 GLAZING WEDGE (BROWN) (3mm GAP) PVC x 200m ROLL
		S/PRENE	1313063	GR43S GLAZING WEDGE (BROWN) (3mm GAP) S/PRENE x 200m ROLL
	4mm	PVC	1313056	GR44 GLAZING WEDGE (WHITE) (4mm GAP) PVC x 200m ROLL
		S/PRENE	1313064	GR44S GLAZING WEDGE (WHITE) (4mm GAP) S/PRENE x 200m ROLL
	5mm	PVC	1313057	GR45 GLAZING WEDGE (BLUE) (5mm GAP) PVC x 150m ROLL
		S/PRENE	1313065	GR45S GLAZING WEDGE (BLUE) (5mm GAP) S/PRENE x 150m ROLL
	6mm	PVC	1313058	GR46 GLAZING WEDGE (YELLOW) (6mm GAP) PVC x 150m ROLL
		S/PRENE	1313066	GR46S GLAZING WEDGE (YELLOW) (6mm GAP) S/PRENE x 150m ROLL
	7mm	PVC	1313059	GR47 GLAZING WEDGE (RED) (7mm GAP) PVC x 150m ROLL
		S/PRENE	1313062	GR47S GLAZING WEDGE (RED) (7mm GAP) S/PRENE x 150m ROLL
	8mm	PVC	1313060	GR48 GLAZING WEDGE (ORANGE) (8mm GAP) PVC x 150m ROLL
		S/PRENE	1313067	GR48S GLAZING WEDGE (ORANGE) (8mm GAP) S/PRENE x 150m ROLL

Backing Gaskets

IMAGE	TO SUIT GAP	MATERIAL	PART #	DESCRIPTION
	2mm	PVC	1313052	GR36 BACKING GASKET - PUSH IN (2mm GAP) PVC x 200m ROLL
		S/PRENE	1313053	GR36S BACKING GASKET - PUSH IN (2mm GAP) S/PRENE x 200m ROLL
	2mm	PVC	1313079	CE36 CO-EXT BACKING GASKET (2mm GAP) PVC x 100m ROLL
		S/PRENE	1313080	CE36S CO-EXT BACKING GASKET (2mm GAP) S/PRENE x 100m ROLL
	4mm	PVC	1313054	GR37 BACKING GASKET - PUSH IN (4mm GAP) PVC x 175m ROLL
		S/PRENE	1313069	GR37S BACKING GASKET - PUSH IN (4mm GAP) S/PRENE x 175m ROLL
	4mm	PVC	1313081	CE37 CO-EXT BACKING GASKET (4mm GAP) PVC x 100m ROLL
		S/PRENE	1313082	CE37S CO-EXT BACKING GASKET (4mm GAP) S/PRENE x 100m ROLL
	6mm	PVC	1313074	GR49 BACKING GASKET - PUSH IN (6mm GAP) PVC x 100m ROLL
		S/PRENE	1313075	GR49S BACKING GASKET - PUSH IN (6mm GAP) S/PRENE x 100m ROLL
	6mm	PVC	1313083	CE49 CO-EXT BACKING GASKET (6mm GAP) PVC x 100m ROLL
		S/PRENE	1313084	CE49S CO-EXT BACKING GASKET (6mm GAP) S/PRENE x 100m ROLL

6. Hardware & Components

Seals

IMAGE	PART #	FINISH	DESCRIPTION
	1376079	BLACK (034)	CE308 CO-EXT DOOR BUFFER S/PRENE x 200m ROLL
	1376449	BLACK (034)	MS6 MULLION SEAL PVC x 200m
	1376847	BLACK (034)	WS48 SEAL PVC x 1m
	1377054	BLACK (034)	PB69 - 550 - 4P WEATHERSEAL x 1m

Fasteners

SCREWS			
PART #	HEAD	DESCRIPTION	LOCATION
1382644	SQUARE #2	10g x 1 (25mm) 304SS SQ #2 PAN S/TAP SCREW x 1000	MAIN FRAME
1382659	SQUARE #2	10g x 2 (51mm) 304SS SQ #2 CSK S/TAP SCREW x 1000	MULLION
1382010	PHILLIPS #2	6g x 1 1/2 (38mm) SS PHILLIPS CSKS S/TAP SCREW x 500	PRO VISTA SASH SILL AT TRANSOM
1382617	PHILLIPS #2	6g x 1/2 (13mm) SS PHILLIPS #2 CSK 4g HEAD SCREW x 1000	PRO VISTA JAMB & HEAD

Frame Joint Gaskets

PART #	DESCRIPTION	FINISH
1385509	FJG50 FRAME JOINT GASKET PVC FOAM TAPE 50 x 1.6mm 45.7m	BLACK (034) GREY (036)

Accessories

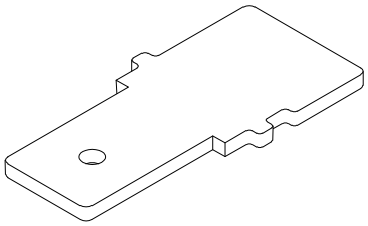

HE001 POCKET STOP	
PART	1378178
FINISH	NOT SPECIFIED (099)
QTY	EACH

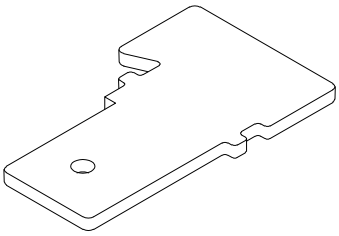

HE002 POCKET STOP	
PART	1378179
FINISH	NOT SPECIFIED (099)
QTY	EACH

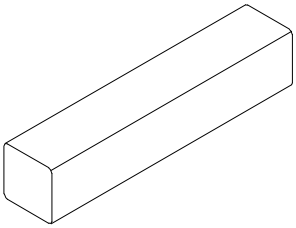

SETTING BLOCK 15x15x75mm	
PART	1376735
FINISH	BLACK (034)
QTY	BAG OF 50

Desiccant

ABSORGEL x 25g	
PART	1300030
FINISH	PEARL WHITE GLOSS (010)
QTY	BAG

(Note: 4 pouches required per lineal metre of Transom)

Silicone

100% NEUTRAL CURE SILICONE

- Premium 100% silicone
- UV Stable
- Superior adhesion
- Flexible + 25%
- AS4020 Approved

100% MATTE NEUTRAL CURE SILIICONE

- Premium 100% silicone
- Matte finish
- UV Stable
- Outstanding elongation
- Higher strength

41 CLADDING SILICONE

- Premium 100% silicone
- UV Stable
- Superior adhesion
- Movement capability + 50%

WET AREA SILICONE

- Premium 100% silicone
- Mould inhibited
- Movement capability + 25%
- UV Stable
- Non corrosive
- Superior adhesion

HYBRID PU ADHESIVE SEALANT

- No isocyanates
- Internal/External
- No shrinking/staining
- Paintable
- Excellent adhesion

20 ACETIC CURE SILICONE

- Premium 100% silicone
- UV Stable
- Superior adhesion
- Flexible + 25%

D60 SILICONE

- Premium 100% silicone
- UV Stable
- 2-5 minute skin time
- Flexible + 25%
- No slump

*For more information on silicones, please refer to Alspec Silicone Brochure.

Silicone Product Codes

Product Category	Item No.	Alspec Part No. Code	Description	Finish	Pack
ALSPEC 100%	1	1386113	ALSPEC 100% NEUTRAL CURE SILICONE x 310g CAT	ALMOND IVORY	CARTRIDGE
	2	1386114	ALSPEC 100% NEUTRAL CURE SILICONE x 310g CAT	ALUMINIUM	CARTRIDGE
	3	1386105	ALSPEC 100% NEUTRAL CURE SILICONE x 310g CAT	BLACK	CARTRIDGE
	4	1386140	ALSPEC 100% NEUTRAL CURE SILICONE x 310g CAT	CAULFIELD GREEN	CARTRIDGE
	5	1386111	ALSPEC 100% NEUTRAL CURE SILICONE x 310g CAT	CLASSIC CREAM	CARTRIDGE
	6	1386108	ALSPEC 100% NEUTRAL CURE SILICONE x 310g CAT	GREY	CARTRIDGE
	7	1386138	ALSPEC 100% NEUTRAL CURE SILICONE x 310g CAT	MONUMENT	CARTRIDGE
	8	1386112	ALSPEC 100% NEUTRAL CURE SILICONE x 310g CAT	OFF WHITE	CARTRIDGE
	9	1386141	ALSPEC 100% NEUTRAL CURE SILICONE x 310g CAT	STONE BEIGE	CARTRIDGE
	10	1386101	ALSPEC 100% NEUTRAL CURE SILICONE x 310g CAT	TRANSLUCENT	CARTRIDGE
	11	1386106	ALSPEC 100% NEUTRAL CURE SILICONE x 310g CAT	WHITE	CARTRIDGE
	12	1386143	ALSPEC 100% NEUTRAL CURE SILICONE x 310g CAT	WOODLAND GREY	CARTRIDGE
ALSPEC 100% MATT	13	1386103	ALSPEC 100% NEUTRAL CURE SILICONE x 420g CAT	BLACK MATT	CARTRIDGE
	14	1386107	ALSPEC 100% NEUTRAL CURE SILICONE x 420g CAT	GREY MATT	CARTRIDGE
	15	1386144	ALSPEC 100% NEUTRAL CURE SILICONE x 420g CAT	WHITE MATT	CARTRIDGE
ALSPEC 20	16	1386115	ALSPEC 20 SILICONE x 310g CAT	TRANSLUCENT	CARTRIDGE
ALSPEC 41 CLADDING	17	1386159	ALSPEC 41 SILICONE x 400g CAT	BLACK MATT	CARTRIDGE
	18	1386117	ALSPEC 41 SILICONE x 600ml SAU	BLACK MATT	SAUSAGE
	19	1386158	ALSPEC 41 SILICONE x 400g CAT	LIGHT GREY MATT	CARTRIDGE
	20	1386118	ALSPEC 41 SILICONE x 600ml SAU	LIGHT GREY MATT	SAUSAGE
	21	1386157	ALSPEC 41 SILICONE x 400g CAT	WHITE MATT	CARTRIDGE
	22	1386145	ALSPEC 41 SILICONE x 600ml SAU	WHITE MATT	SAUSAGE
ALSPEC D60	23	1386121	ALSPEC D60 SILICONE x 310g CAT	BLACK	CARTRIDGE
	25	1386123	ALSPEC D60 SILICONE x 310g CAT	GREY	CARTRIDGE
	26	1386120	ALSPEC D60 SILICONE x 310g CAT	TRANSLUCENT	CARTRIDGE
	27	1386124	ALSPEC D60 SILICONE x 310g CAT	WHITE	CARTRIDGE
ALSPEC HYBRID PU	28	1386127	ALSPEC HYBRID PU x 480g CAT	BLACK	CARTRIDGE
	29	1386126	ALSPEC HYBRID PU x 600ml SAU	BLACK	SAUSAGE
	30	1386160	ALSPEC HYBRID PU x 480g CAT	GREY	CARTRIDGE
	31	1386128	ALSPEC HYBRID PU x 600ml SAU	GREY	SAUSAGE
	32	1386130	ALSPEC HYBRID PU x 480g CAT	WHITE	CARTRIDGE
	33	1386129	ALSPEC HYBRID PU x 600ml SAU	WHITE	SAUSAGE
ALSPEC WET AREA	34	1386137	ALSPEC WET AREA SILICONE x 310g CAT	ALMOND IVORY	CARTRIDGE
	35	1386139	ALSPEC WET AREA SILICONE x 310g CAT	BLACK	CARTRIDGE
	36	1386146	ALSPEC WET AREA SILICONE x 310g CAT	BLUESTONE	CARTRIDGE
	37	1386147	ALSPEC WET AREA SILICONE x 310g CAT	CHARCOAL	CARTRIDGE
	38	1386136	ALSPEC WET AREA SILICONE x 310g CAT	LIGHT GREY	CARTRIDGE
	39	1386148	ALSPEC WET AREA SILICONE x 310g CAT	MID GREY	CARTRIDGE
	40	1386149	ALSPEC WET AREA SILICONE x 310g CAT	OFF WHITE	CARTRIDGE
	41	1386150	ALSPEC WET AREA SILICONE x 310g CAT	PEWTER	CARTRIDGE
	42	1386151	ALSPEC WET AREA SILICONE x 310g CAT	STONE BEIGE	CARTRIDGE
	43	1386154	ALSPEC WET AREA SILICONE x 310g CAT	TAUPE	CARTRIDGE
	44	1386152	ALSPEC WET AREA SILICONE x 310g CAT	TILE GREY	CARTRIDGE
	45	1386133	ALSPEC WET AREA SILICONE x 310g CAT	TRANSLUCENT	CARTRIDGE
	46	1386153	ALSPEC WET AREA SILICONE x 310g CAT	TRAVERTINE	CARTRIDGE
	47	1386134	ALSPEC WET AREA SILICONE x 310g CAT	WHITE	CARTRIDGE

7. Typical Elevation

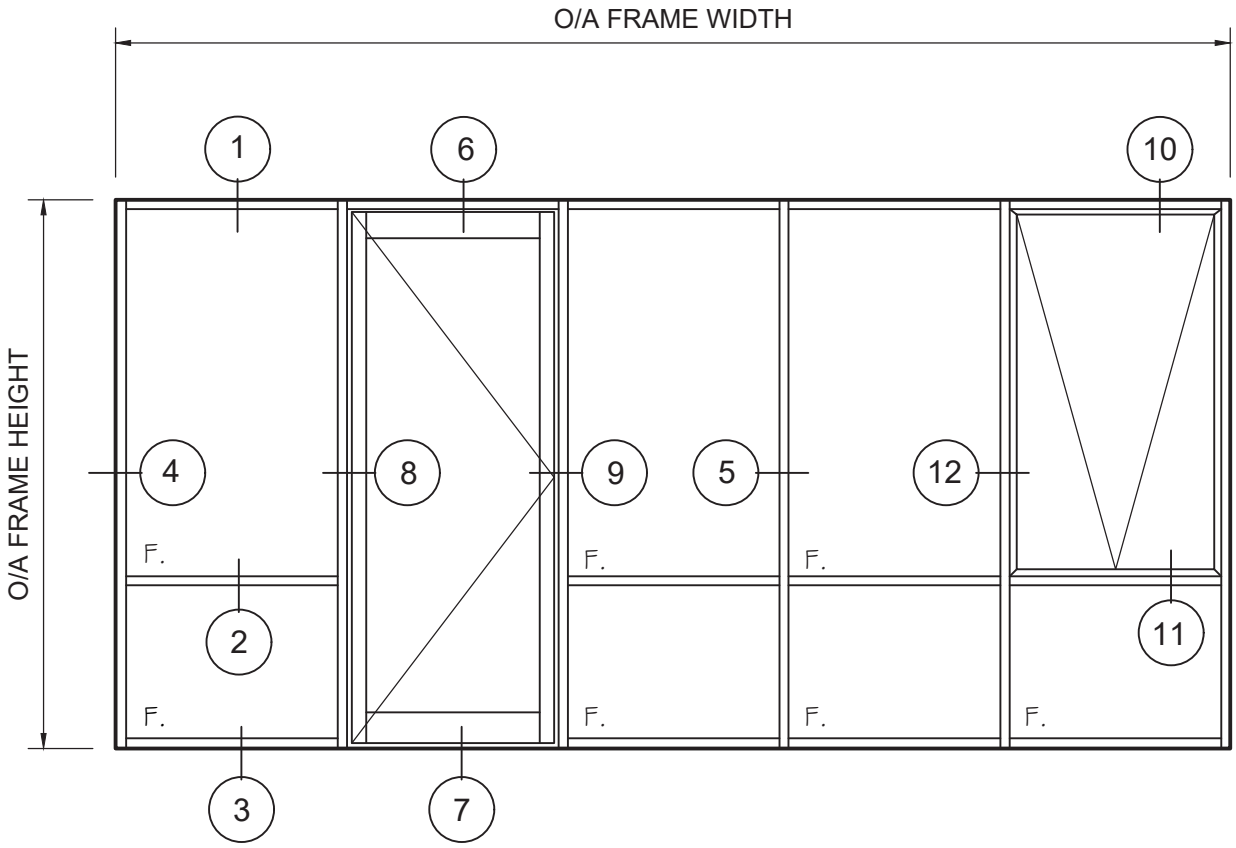

Typical Head, Transom & Sill Details

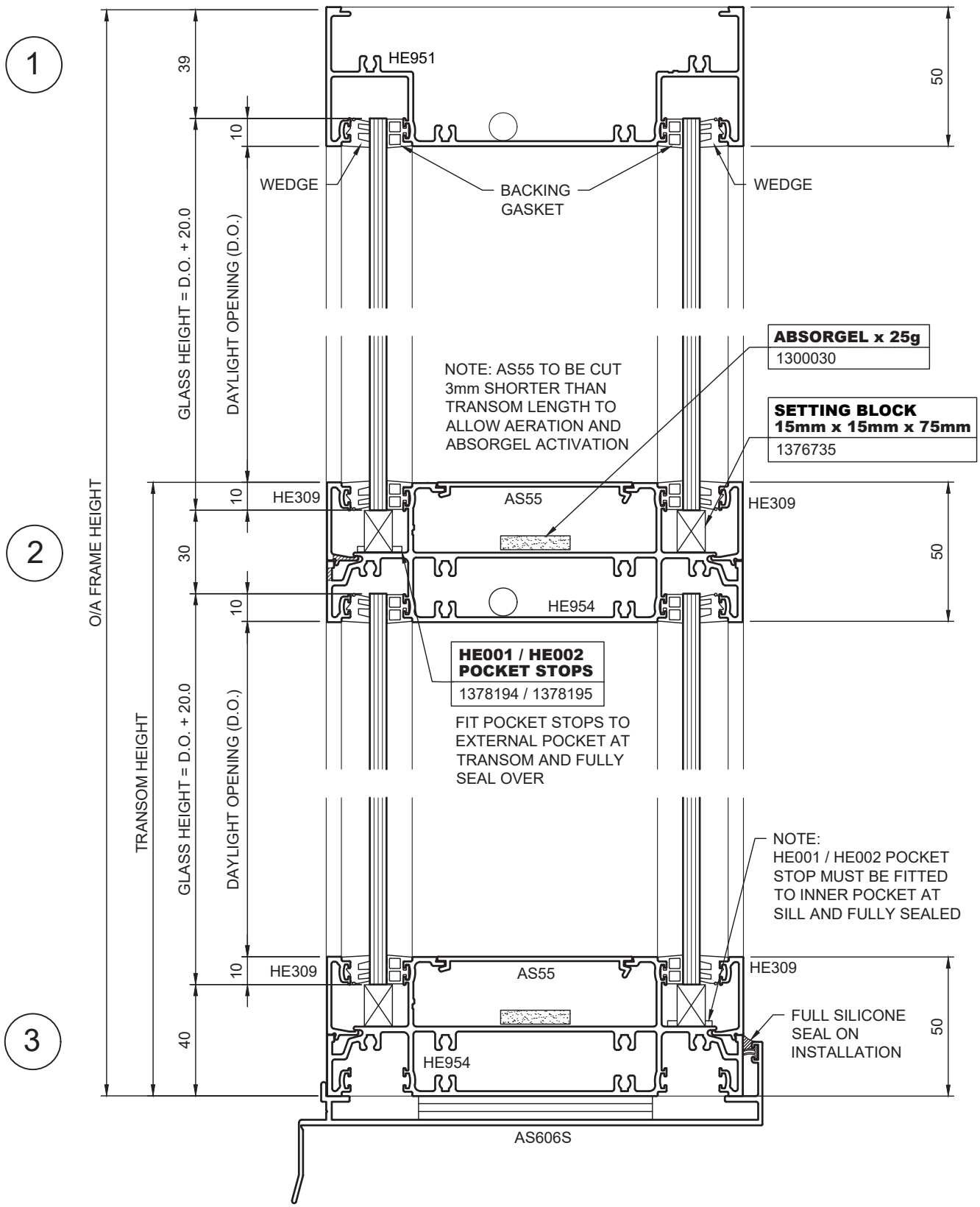

Typical Jamb/ Mullion Details

** NOMINAL DIMENSIONS ONLY. MAY VARY DUE TO PROJECT REQUIREMENTS

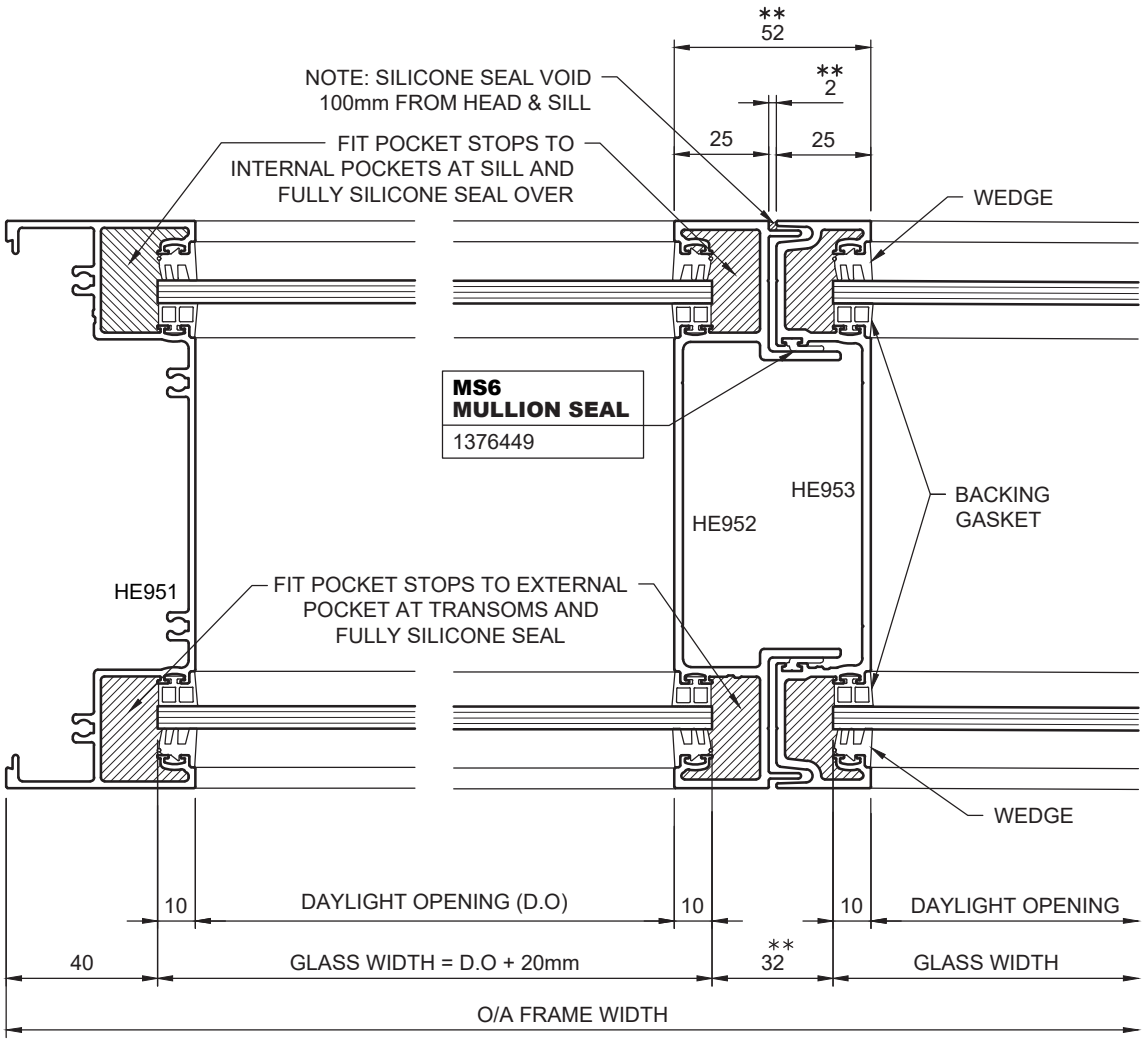

4 5

Typical Door Head and Sill

6

7

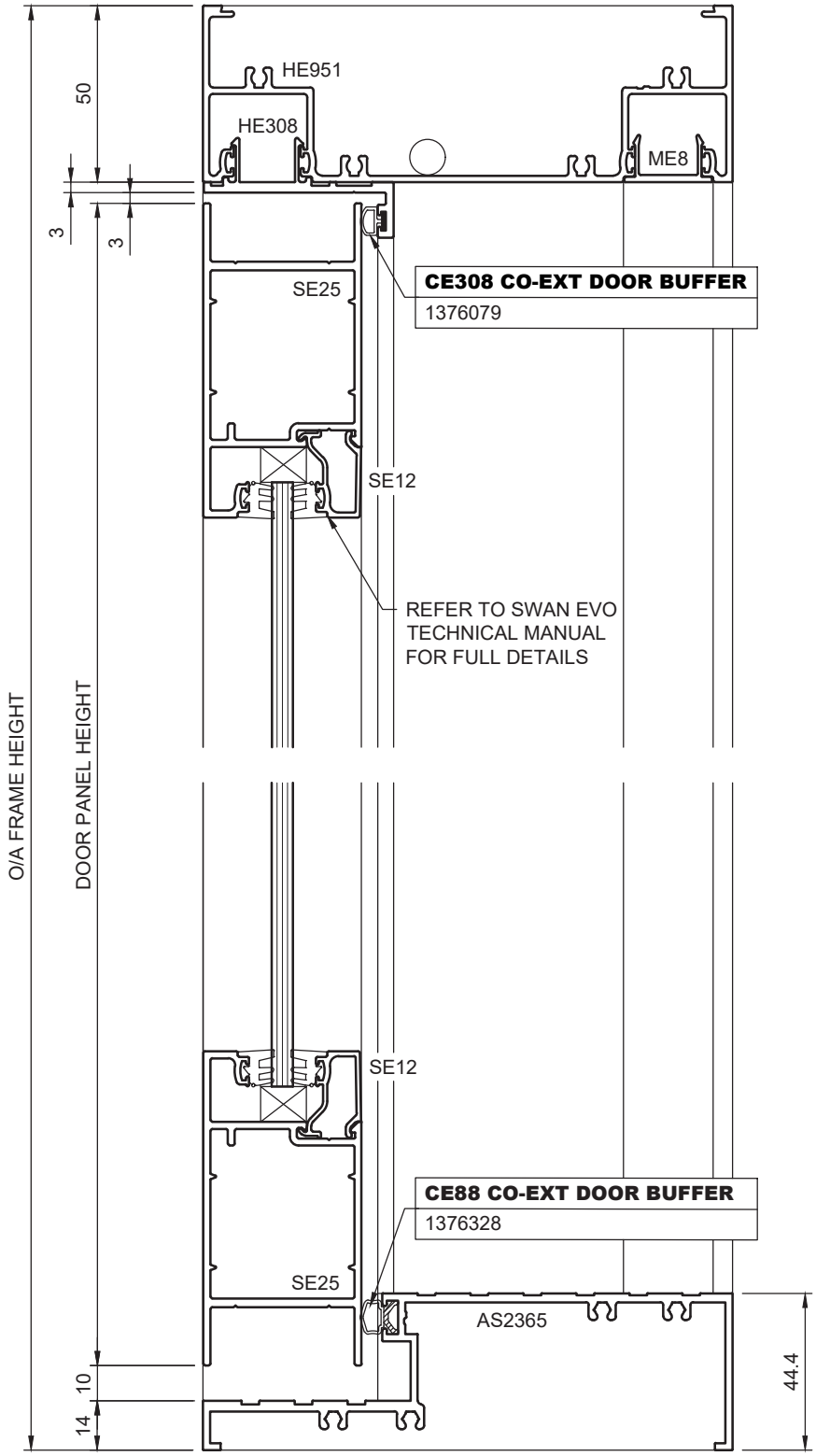

Typical Door Jamb Details

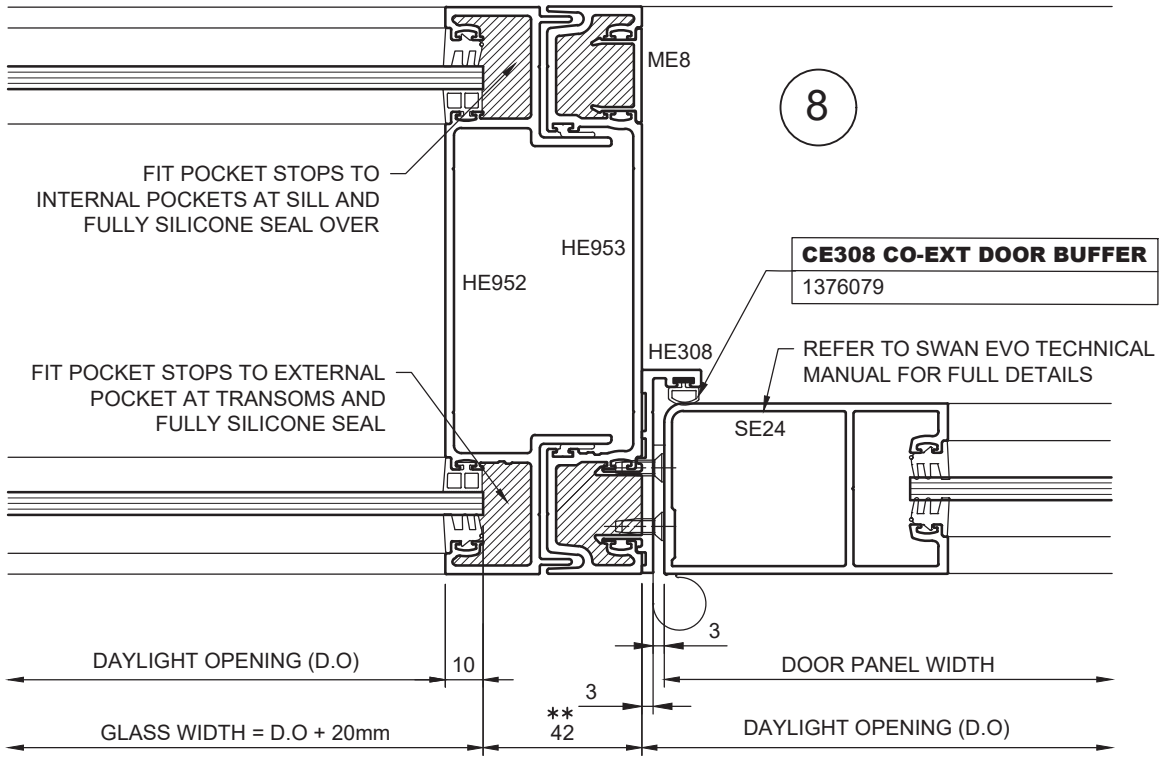

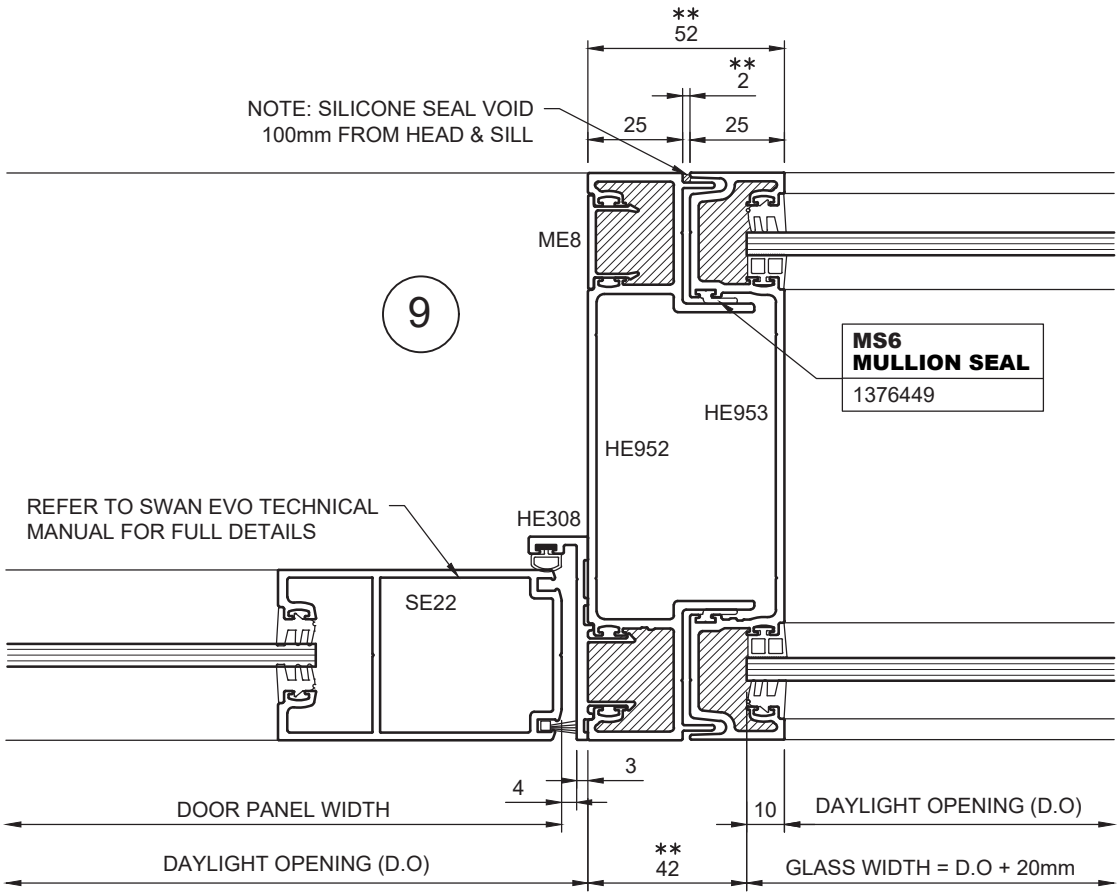

Typical Head/Awning & Transom/Awning Detail

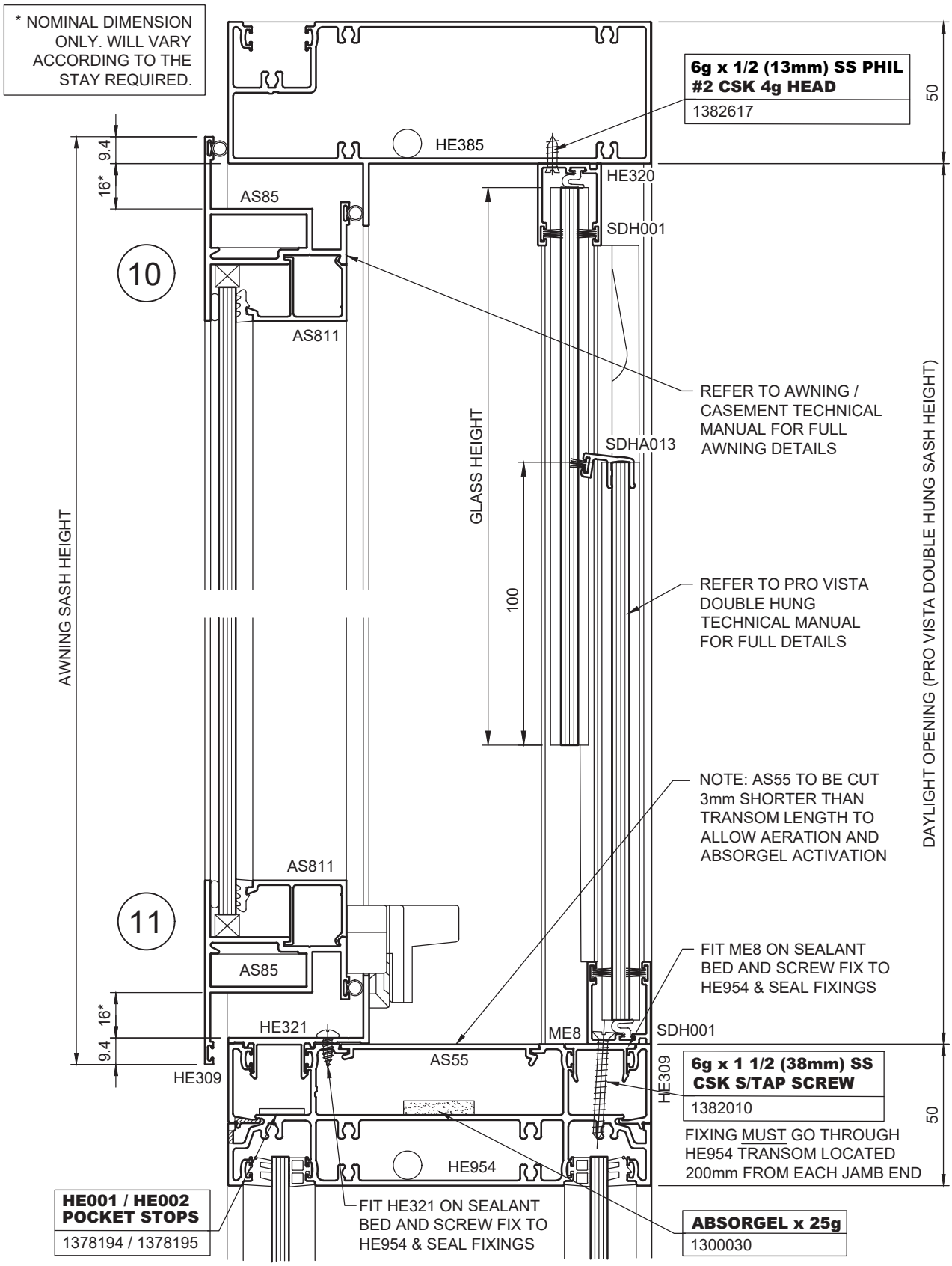

Typical Mullion Fixed/Awning Detail

** NOMINAL DIMENSIONS ONLY. MAY VARY DUE TO PROJECT REQUIREMENTS

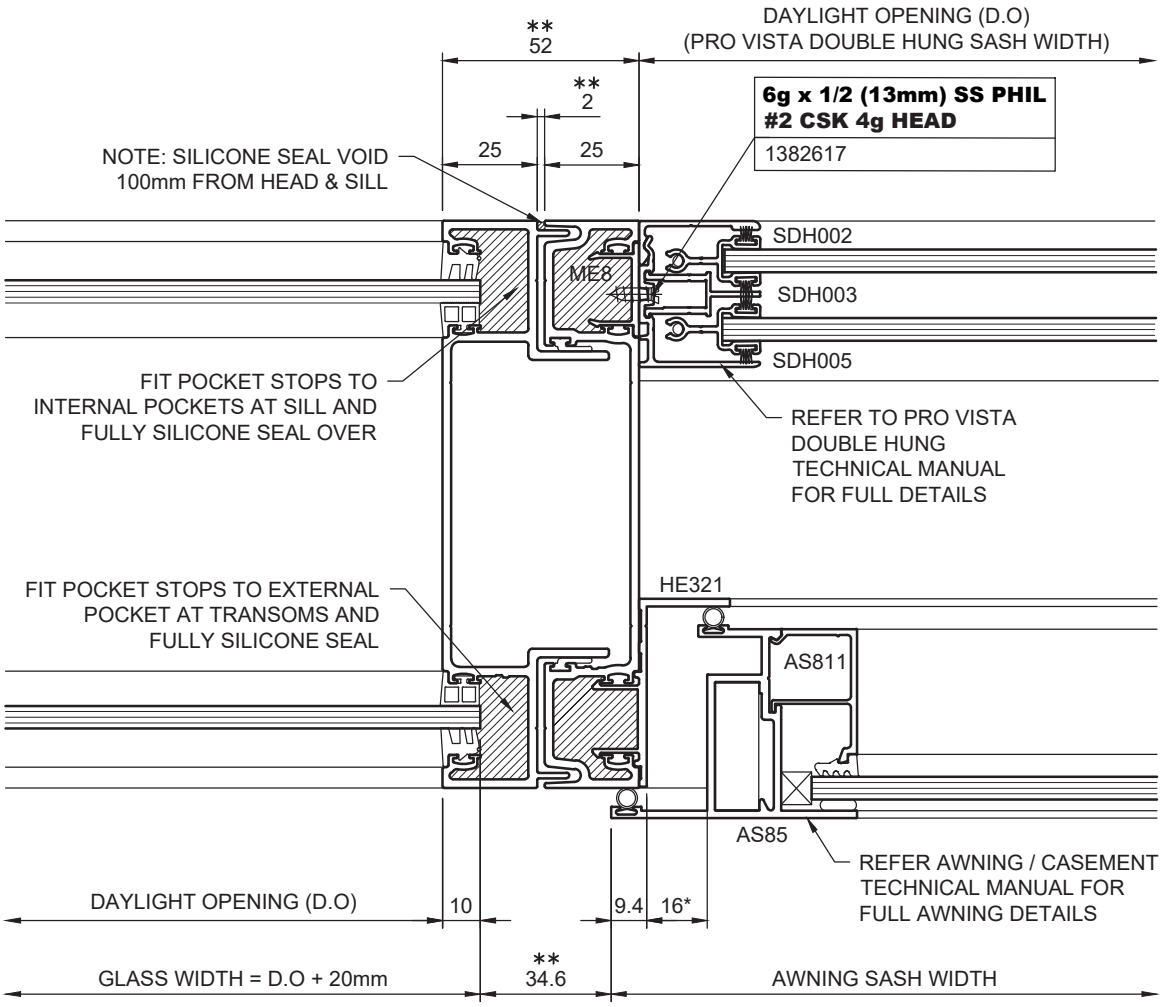

12

* NOMINAL DIMENSION ONLY.
WILL VARY ACCORDING TO THE STAY REQUIRED.

10. Manufacturing Details

Jamb Preparation

L.H. DRAWN
R.H. OPPOSITE

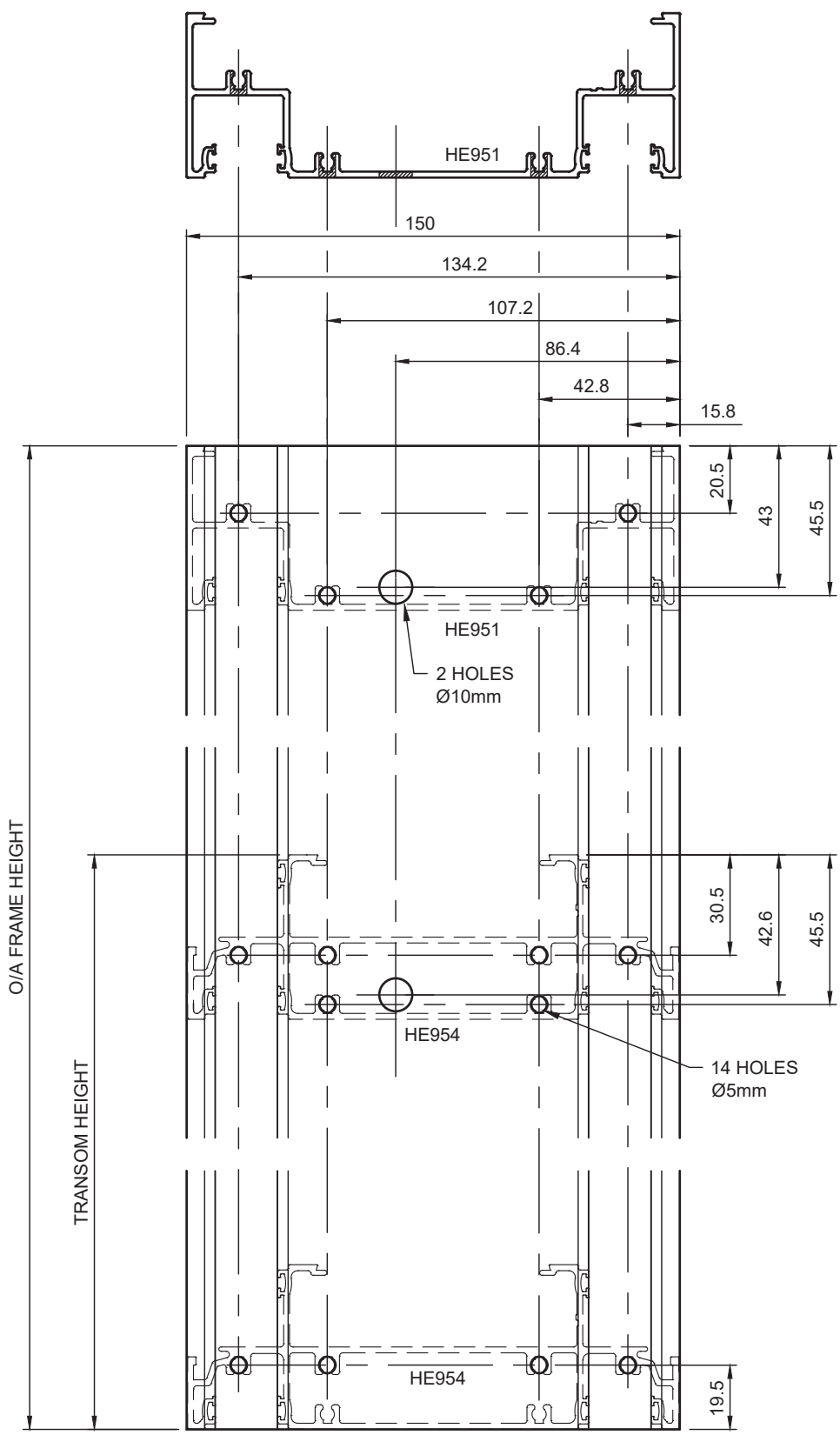

Male Mullion Preparation

L.H. DRAWN
R.H. OPPOSITE

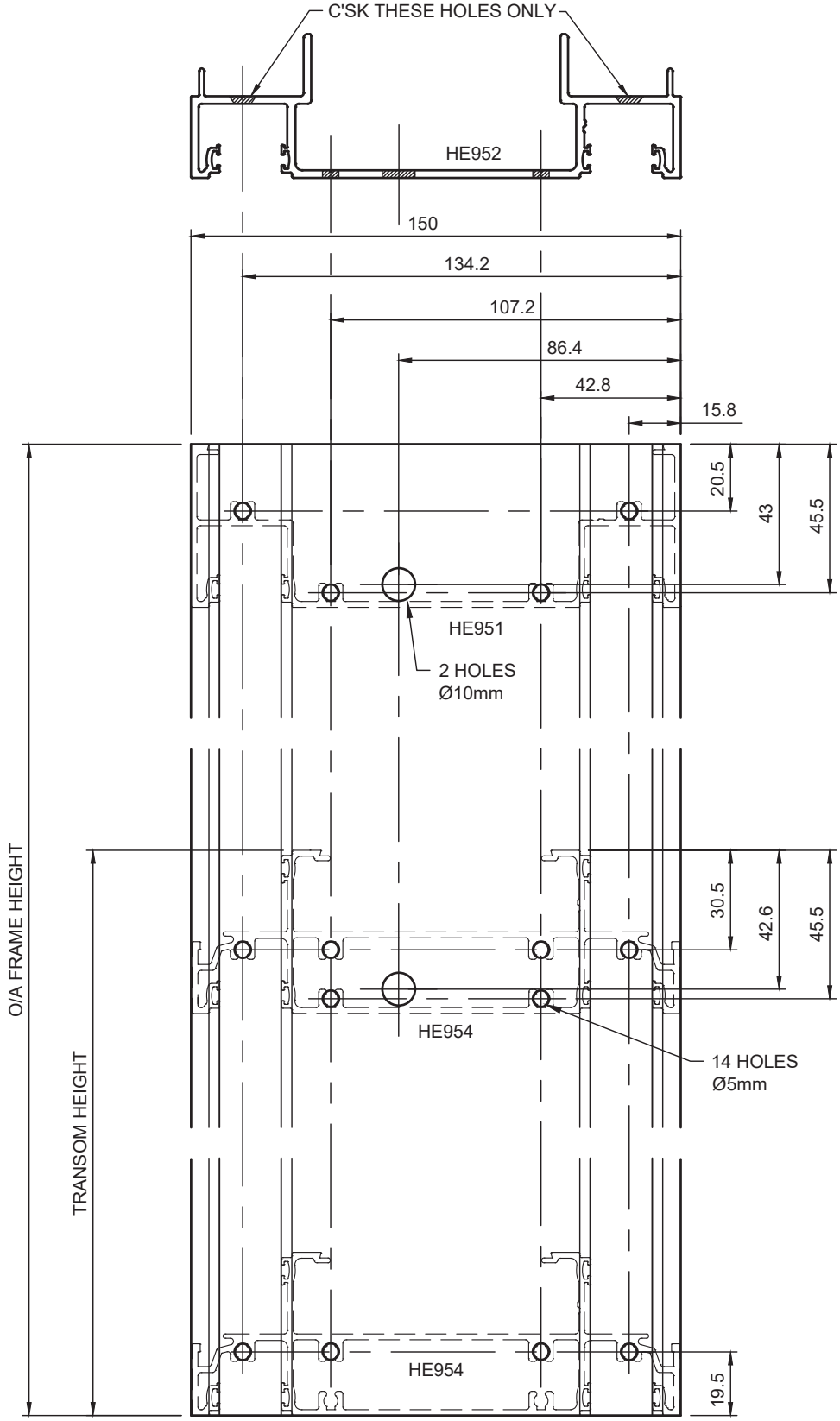

Female Mullion Preparation

L.H. DRAWN
R.H. OPPOSITE

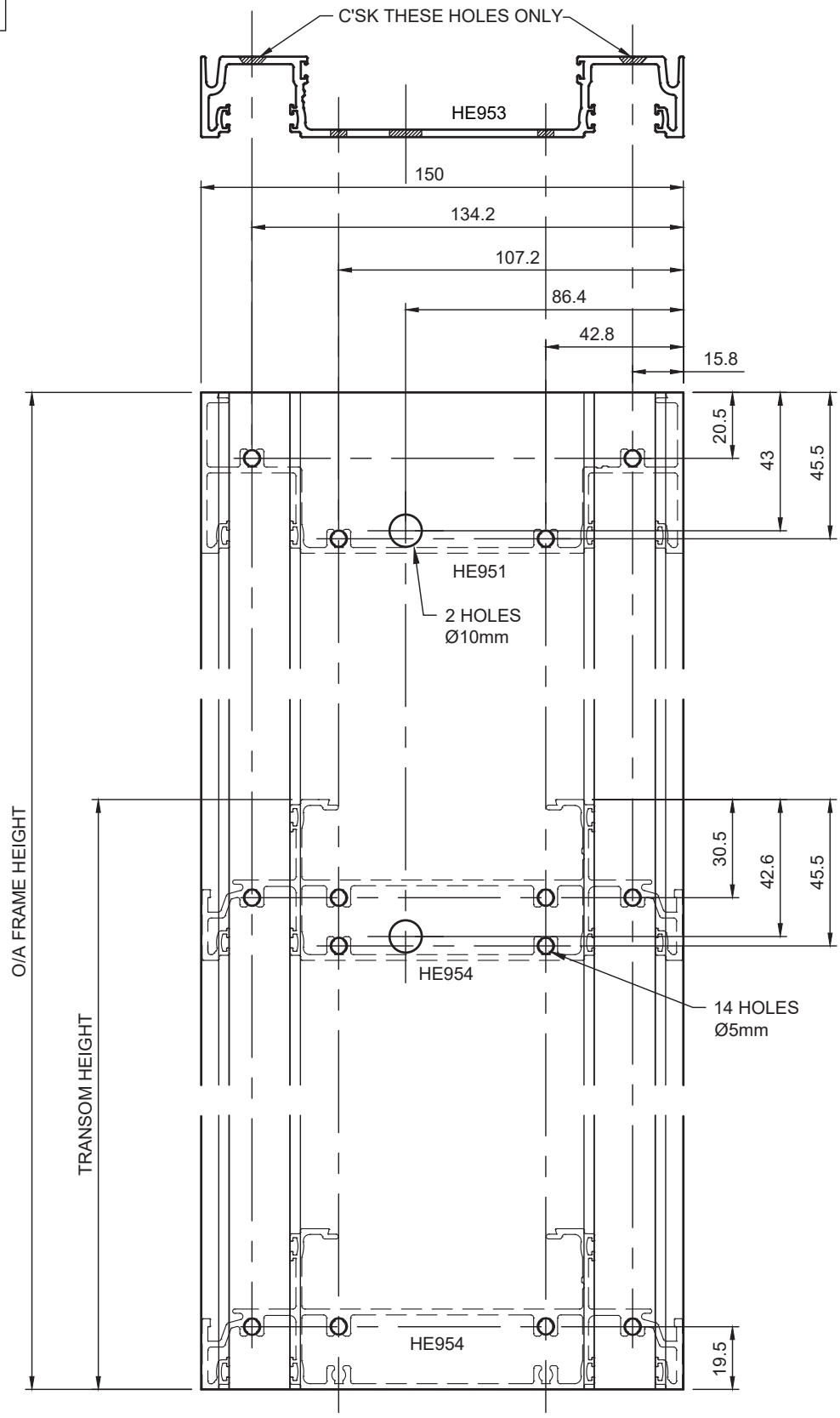

Transom Drainage Preparation

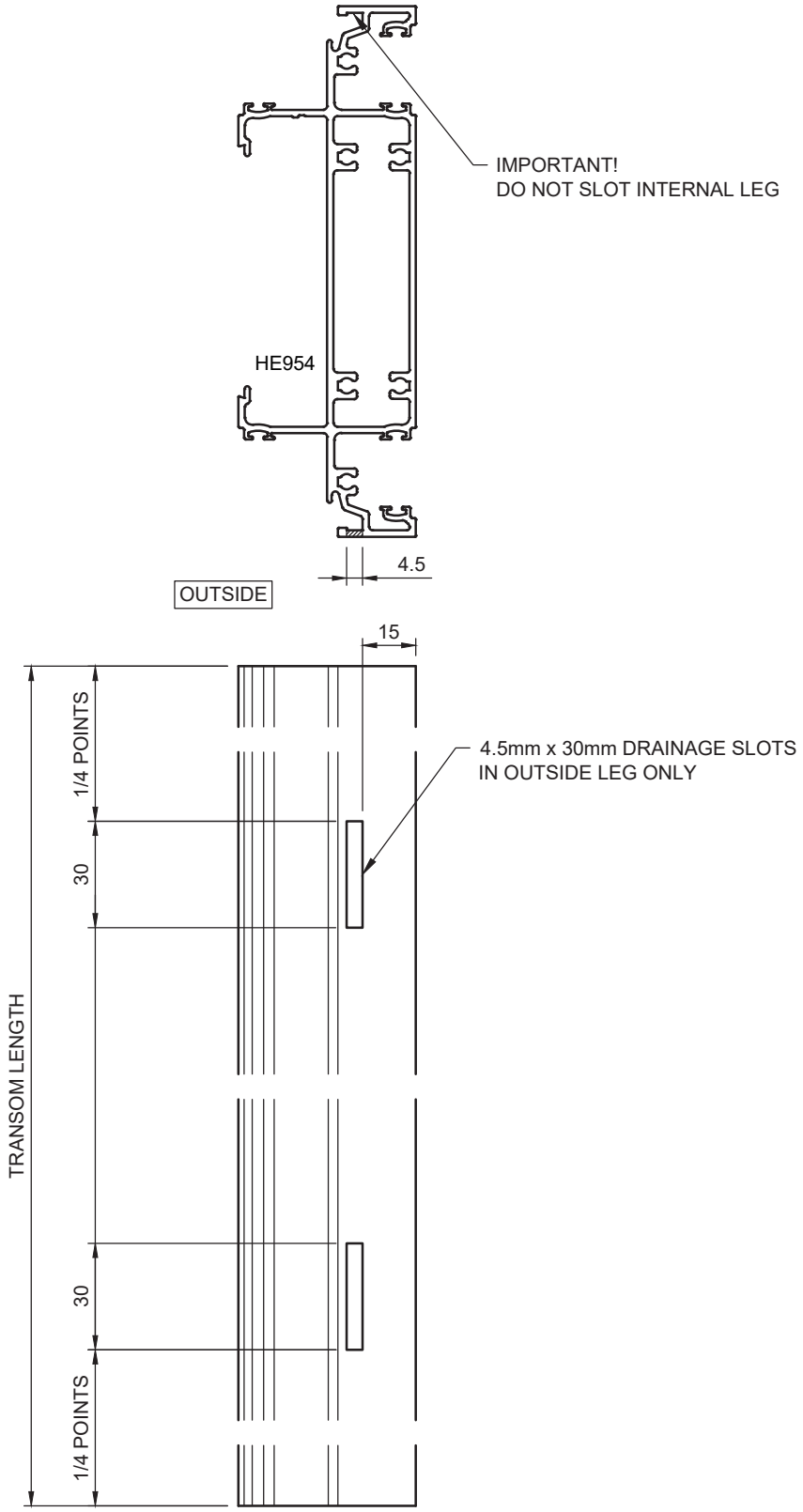

Glazing Bead Drainage Preparation

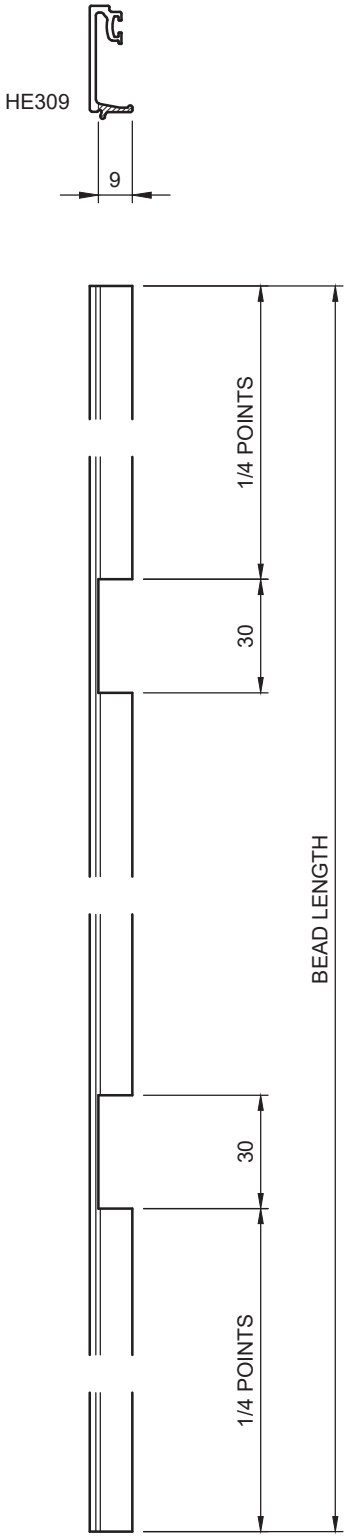

Mullion Preparation for Door Jambs

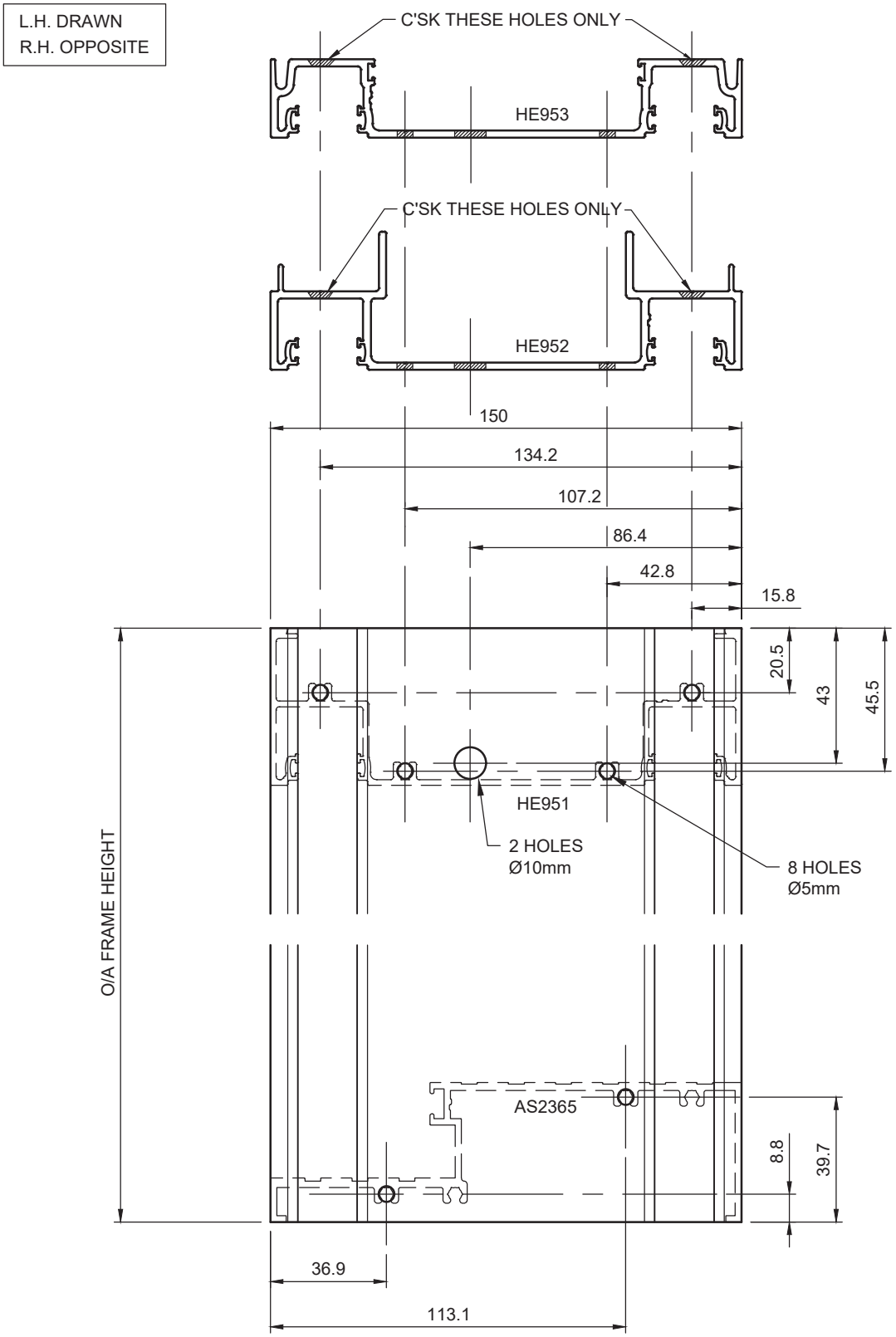

Mullion Preparation for Awning Head

L.H. DRAWN
R.H. OPPOSITE

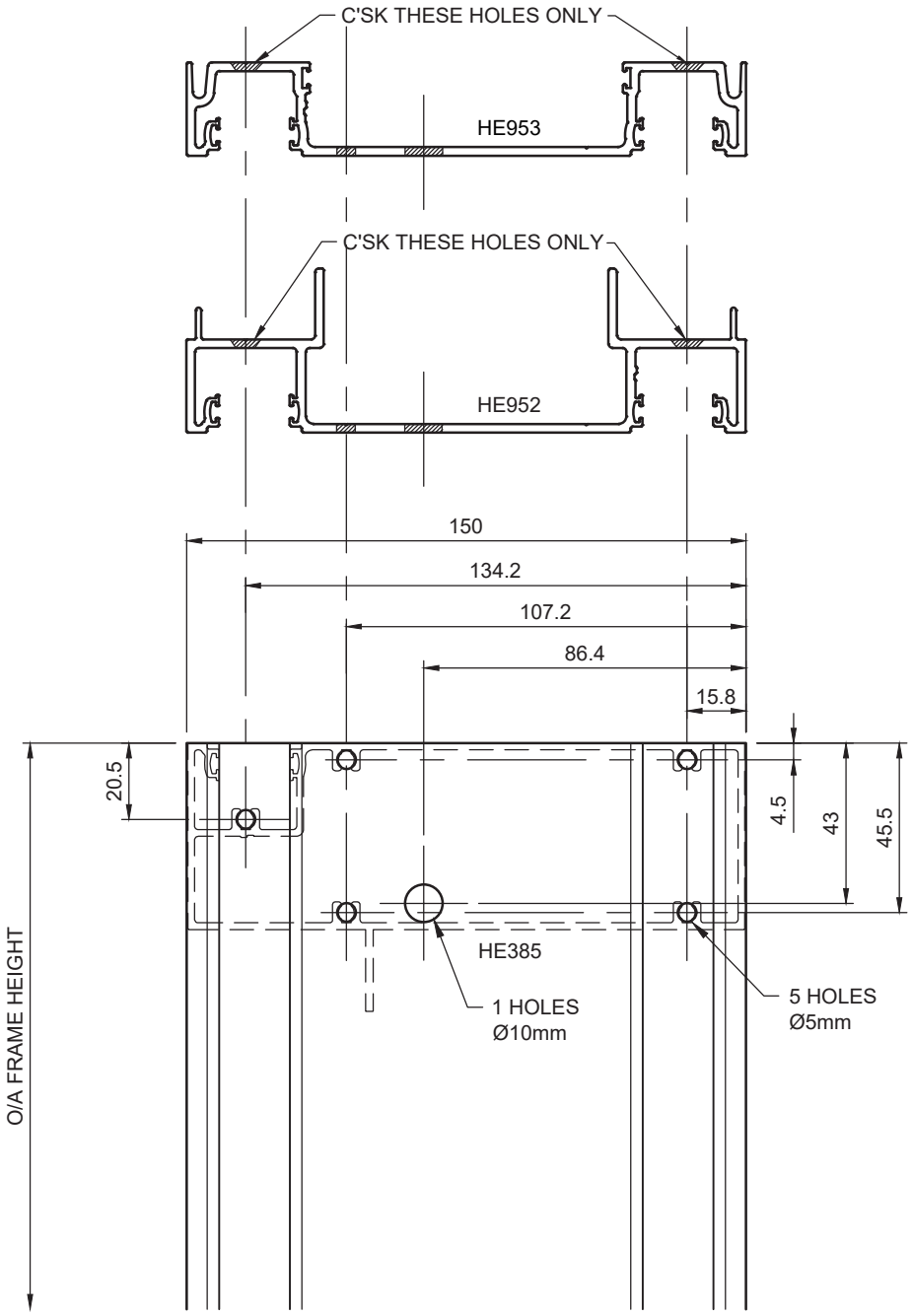

11. Assembly Details

Sill Assembly and Sealing Details

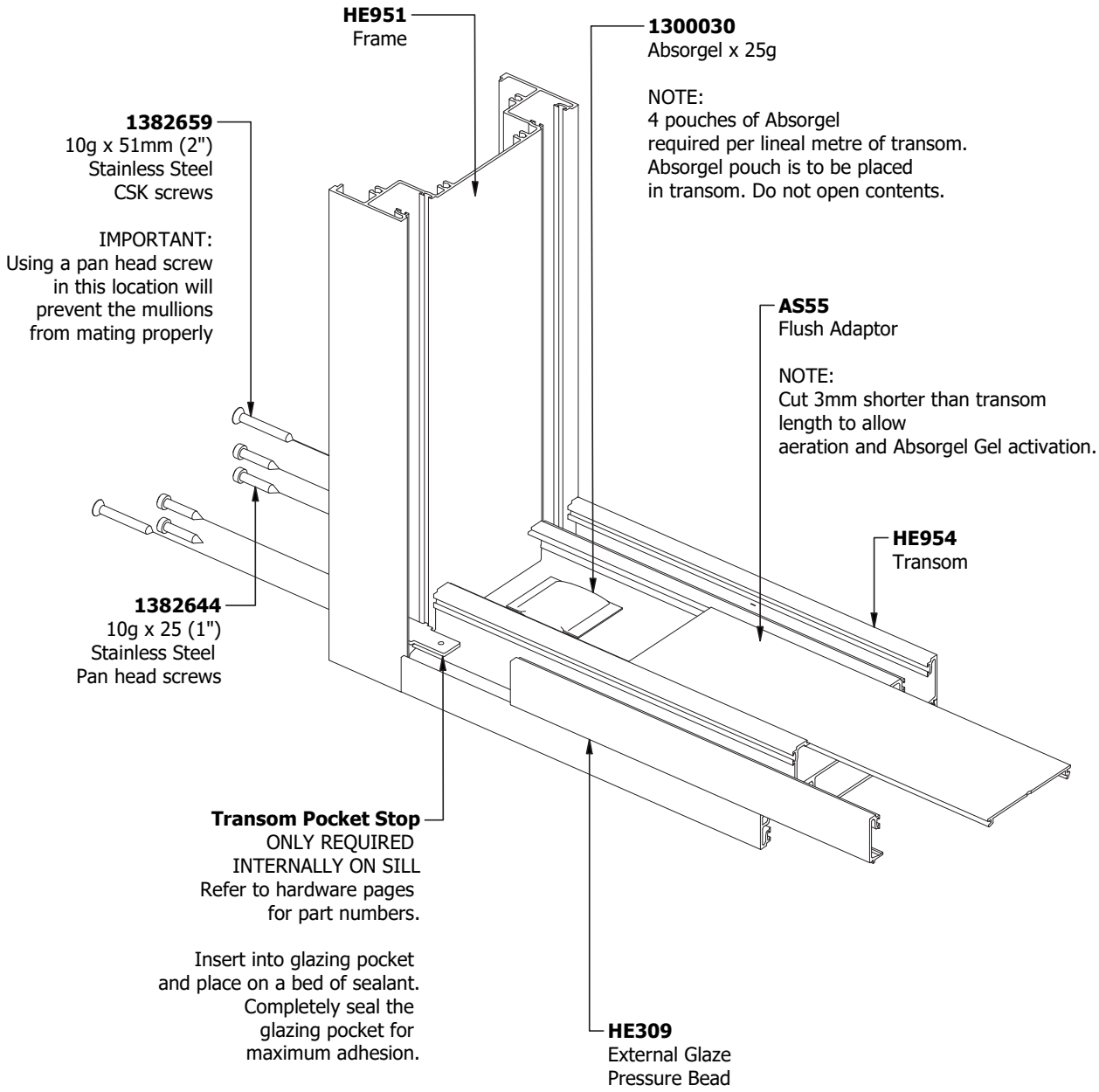

Transom Assembly and Sealing Details

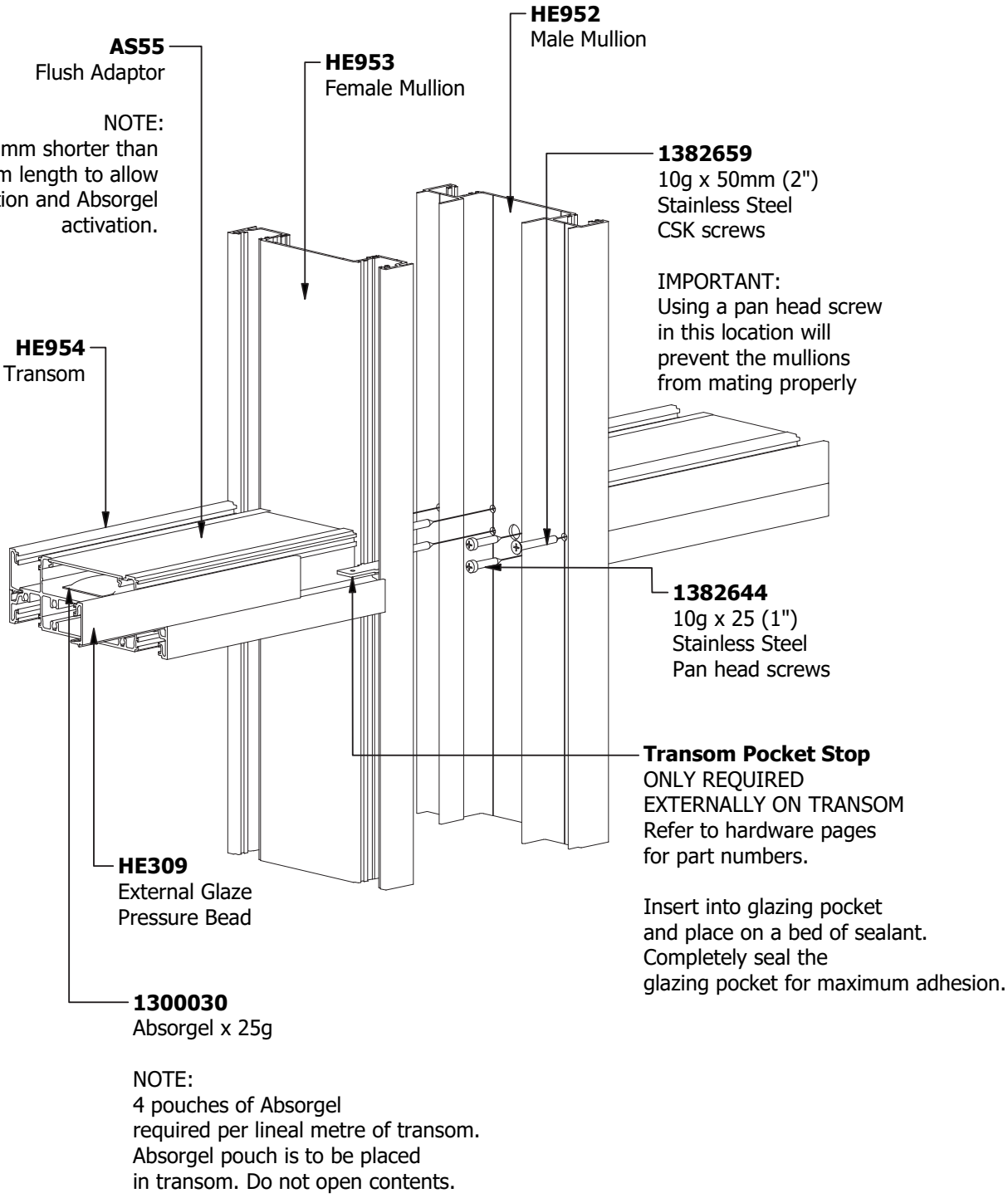

Glazing Details - Captive

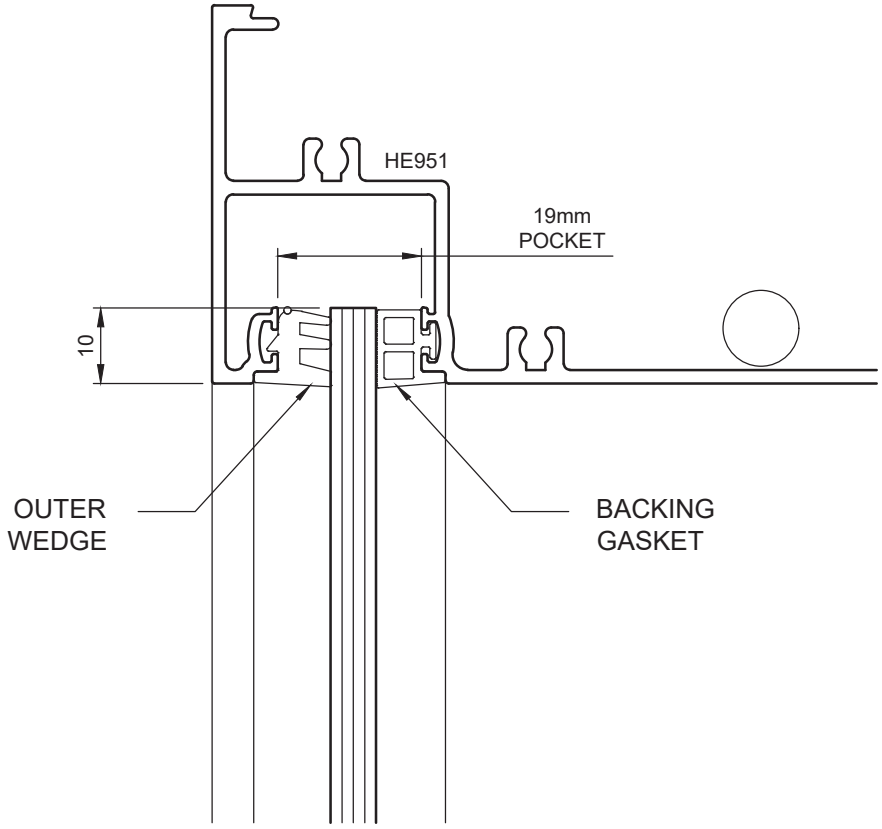

	WEDGE		PUSH IN BACKING GASKET	CO-EXTRUDED BACKING GASKET
GLASS THICKNESS	ID COLOUR	REF. (GAP)	REF. (GAP)	REF. (GAP)
6/6.38mm	RED	GR47 (7mm)	GR49 (6mm)	CE49 (6mm)
8/8.38mm	BLUE	GR45 (5mm)	GR49 (6mm)	CE49 (6mm)
10/10.38mm	BLUE	GR45 (5mm)	GR37 (4mm)	CE37 (4mm)
10.5/ 10.76mm	WHITE	GR44 (4mm)	GR37 (4mm)	CE37 (4mm)
12/12.38mm	BLUE	GR45 (5mm)	GR36 (2mm)	CE36 (2mm)
12.5/ 12.76mm	WHITE	GR44 (4mm)	GR37 (4mm)	CE36 (2mm)

FRAMING

Your new **Hunter Evo 150mm Flush Glazed Acoustic Frames** have been manufactured using the highest quality materials available to the Architectural industry. Constructed from Architectural grade aluminium, these products are highly corrosion resistant and exceptionally strong. With a moderate amount of maintenance, the **Hunter Evo 150mm Flush Glazed Acoustic Frames** will retain it's good looks and resist the elements for years to come.

The **Hunter Evo 150mm Flush Glazed Acoustic Frames** are the product of extensive research and development and designed to resist corrosion and rusting, but as with all external elements on the building require some maintenance to keep them looking good and performing well. Depending on how harsh the environment elements are, the maintenance period will vary. Refer to recommended maintenance table below.

Your **Hunter Evo 150mm Flush Glazed Acoustic Frames** should only ever need to be washed down with a soft bristled brush using warm water and mild detergent. Rinse well with fresh water and remove any detergent residue. Strong detergents and abrasive cleaners should never be used to clean the **Hunter Evo 150mm Flush Glazed Acoustic Frames** as they may scratch or damage the surface finish.

MAINTENANCE PERIOD TABLE

ENVIRONMENT	RECOMMENDED MAXIMUM MAINTENANCE INTERVAL
Mild	Six Months
Moderate	Three Months
Tropical/Severe	One Month

Environmental Definitions:

Mild – Being rural, away from the coast and remote from industry and urban activity.

Moderate – Being mainly urban, inland and away from heavy industry.

Tropical – Being coastal/marine, subject to salt deposition and within 15km of the Eastern coast or 10km of the Western coast of Australia.

EVERYTHING ALUMINIUM & HARDWARE

HEAD OFFICE | 3 Alspec Place, Eastern Creek NSW 2766
Phone: 02 9834 9500 | Fax: 02 9834 9532 | info@alspec.com.au

ALSPEC SHOWROOMS

AluSpace by Alspec - Sydney | 110 New South Head Road, Edgecliff NSW 2027
Phone: 1300 ALUSPACE (1300 258 772) | design@alspec.com.au

AluSpace by Alspec - Adelaide | 1 Pope Court, Beverley SA 5009
Phone: 08 8150 6960 | adelaidealuspace@alspec.com.au

Brisbane Design Centre | 66 Merivale Street, South Brisbane QLD 4101
Phone: 07 3089 4900 | brisbane@alspec.com.au

MELBOURNE BRANCH
26–40 Pound Road West
Dandenong South VIC 3175
Phone: 03 8787 6333
Fax: 03 8787 6399
melbourne@alspec.com.au

ADELAIDE BRANCH
1 Pope Court
Beverley SA 5009
Phone: 08 8150 6960
Fax: 08 8150 6999
adelaide@alspec.com.au

PERTH BRANCH
30 Holder Way
Malaga WA 6090
Phone: 08 9209 9100
Fax: 08 9209 9199
perth@alspec.com.au

BRISBANE BRANCH
8–22 Jutland Street
Loganlea QLD 4131
Phone: 07 3089 4900
Fax: 07 3089 4999
brisbane@alspec.com.au

NEWCASTLE BRANCH
95 Griffiths Road
Lambton NSW 2299
Phone: 02 4952 9111
Fax: 02 4952 9728
newcastle@alspec.com.au

CAIRNS BRANCH
34–38 Hargreaves Street
Edmonton QLD 4869
Phone: 07 4037 6666
Fax: 07 4037 6699
cairns@alspec.com.au

CANBERRA BRANCH
28 Sheppard Street
Hume ACT 2620
Phone: 02 5134 3300
canberra@alspec.com.au

DARWIN BRANCH
25 Bishop Street
Woolner NT 0820
Phone: 08 8941 7300
darwin@alspec.com.au

SUNSHINE COAST BRANCH
4-8 Empire Crescent
Chevallum QLD 4555
Phone: 07 5437 6123
Fax: 07 5437 6124
chevallum@alspec.com.au

BRENDALE BRANCH
24 Doherty Street
Brendale QLD 4500
Phone: 07 3205 9911
Fax: 07 3205 9915
brendale@alspec.com.au

TOWNSVILLE BRANCH
21 Carroll Street
Mount Louisa QLD 4814
Phone: 07 3089 4965
Fax: 1300 131 747
townsville@alspec.com.au

BUNDABERG BRANCH
17 Production Street
Svensson Heights QLD 4670
Phone: 07 4111 2000
Fax: 07 4111 2099
bundaberg@alspec.com.au

All pictures shown in this catalgoue are for illustration purposes only. Actual product may vary due to product enhancement.