ALSPEC ALUMINIUM SYSTEMS

TECHNICAL MANUAL

McARTHUR 150 OFFSET POCKET FRAMING

COPYRIGHT

This Technical manual remains the property of Aluminium Specialties Group Pty Limited and contains privileged information which is the subject of copyright and the manual or any part thereof may not be reproduced, copied or loaned in any form without the written permission of Aluminium Specialties Group Pty Limited.

This manual is to be returned to Aluminium Specialties Group Pty Limited when requested.

DISCLAIMER

Whilst every effort has been made to ensure the technical details contained within this manual are accurate, Aluminium Specialties Group Pty Limited can take no responsibilities for any loss or damage whatsoever arising as a result of any errors contained in this manual.

Also, interpretation of standards or codes within this manual is Aluminium Specialties Group Pty Limited interpretation for such codes. Responsibility for code compliance remains with the user of this manual. In some cases product dimensions may vary or be changed without notice. The user of this manual should not act or rely upon on any information contained in this manual without first obtaining appropriate professional advice relating to their particular circumstances.

Aluminium Specialties Group Pty Limited disclaims all liability for loss or damage suffered by any party who acts or fails to act in reliance of this manual.

Issued to:. . . . . .

. . . . . .

ALSPEC contact: . . . . . .

Date:. . . . . .

Manual reference number: McA150-OFP . . . . . .

ALSPEC ALUMINIUM SYSTEMS

TECHNICAL MANUAL

McARTHUR 150 OFFSET POCKET FRAMING

CONTENTS

1.0 TECHNICAL MANUAL RELEASE NOTES

2.0 TECHNICAL DATA

2.1 SPECIFICATION

2.2 LOADING TABLES

2.2.1 Mullion combination AS901 + AS904 L/250
2.2.2 Mullion combination AS905 + AS906 L/250
2.2.3 Mullion combination AS907 + AS908 L/250
2.2.4 101.6mm Transom combination AS25C + AS3 L/250
2.2.5 101.6mm Transom combination AS2C + AS4C + AS3 L/250
2.2.6 150mm Transom combination AS902 + AS904 + AS3 L/250

2.3 TEST REPORTS RESULTS

2.3.1 Two panels with AS905/AS906 Mullions and AS902/AS904/AS3 Transom

3.0 TECHNICAL DETAILS

3.1 EXTRUSIONS

3.1.1 Extrusion profiles
3.1.2 Extrusion profiles
3.1.3 Extrusion profiles
3.1.4 Extrusion profiles

3.2 HARDWARE

3.2.1 Glazing wedges
3.2.2 Glazing wedges
3.2.3 Accessories

3.3 ELEVATIONS

3.3.1 Typical elevation

3.4 GENERAL ARRANGEMENT DRAWINGS

3.4.1 Head & sill details with 101.6mm transom
3.4.2 Head & sill details with150mm transom
3.4.3 Jamb & mullion details
3.4.4 Door jamb detail
3.4.5 Awning jamb detail

McARTHUR 150 OFFSET POCKET FRAMING

CONTENTS Continued

3.6 MANUFACTURING DRAWINGS
3.6.1 Jamb preparation - 101.6mm transom
3.6.2 Glazing adaptor preparation - 101.6mm transom
3.6.3 Mullion preparation - 101.6mm transom
3.6.4 Jamb preparation - 150mm transom
3.6.5 Glazing adaptor preparation - 150mm transom
3.6.6 Mullion preparation - 150mm transom
3.6.7 Transom drainage preparation
3.6.8 Transom sealing preparation

3.7 GLAZING DETAILS
3.7.1 Glazing details

4.0 CARE AND MAINTENANCE

McARTHUR 150 OFFSET POCKET FRAMING

Section 1.0
TECHNICAL MANUAL RELEASE NOTES

This page is intended to record all changes to the **McARTHUR 150 OFFSET POCKET FRAMING** technical manual pages. It is therefore critical that all changes are recorded in the below AMENDMENTS box prior to release to our customer.

Changes or additions to this manual will be itemized with a brief description and date when the amendments were made.

It is important that a copy of the page be issued with the update and inserted as the first page in the customers technical manual.

DATE	AMENDMENT DESCRIPTION	REMOVE PAGE	INSERT NEW PAGE
01 / 10 / 2013	*Contents page amended*	~	~
01 / 10 / 2013	*Technical manual release notes amended*	*1.0*	*1.0*
01 / 10 / 2013	*Loading Table*	*2.2.3*	*2.2.3*
01 / 10 / 2013	*Loading Table*	*2.2.4*	*2.2.4*
01 / 10 / 2013	*Loading Table*	*2.2.5*	*2.2.5*
01 / 10 / 2013	*Extrusion page added*	~	*3.1.4*
01 / 10 / 2013	*Hardware page*	*3.2.1*	*3.2.1*
01 / 10 / 2013	*Hardware page*	*3.2.2*	*3.2.2*
01 / 10 / 2013	*Typical Jamb and Mullion Details*	*3.4.3*	*3.4.3*
01 / 10 / 2013	*Typical Door Jamb Detail*	*3.4.4*	*3.4.4*
01 / 10 / 2013	*AS85 Awning Jamb Detail*	*3.4.5*	*3.4.5*
01 / 10 / 2013	*Mullion Preparation - 101.60mm Transom*	*3.6.3*	*3.6.3*
01 / 10 / 2013	*Mullion Preparation - 150mm Transom*	*3.6.6*	*3.6.6*
01 / 01 / 2014	*Contents page amended*	-	-
01 / 01 / 2014	*Technical manual release notes amended*	*1.0*	*1.0*
01 / 01 / 2014	*Load tables amended and new pages added*	*2.2.3 to 2.2.4*	*2.2.3 to 2.2.4*
01 / 01 / 2014	*Extrusion page amended*	*3.1.3*	*3.1.3*
01 / 01 / 2014	*Hardware pages amended*	*3.2.1 to 3.2.2*	*3.2.1 to 3.2.2*
01 / 01 / 2014	*Hardware page added*	*3.2.3*	*3.2.3*
01 / 01 / 2014	*Typical detail pages amended*	*3.4.1 to 3.4.5*	*3.4.1 to 3.4.5*
01 / 01 / 2014	*Glazing detail page amended*	*3.7.1*	*3.7.1*
01 / 02 / 2014	*Revised test results & accessories pages*	*2.3.1 / 3.2.3*	*2.3.1 / 3.2.3*
01 / 06 / 2014	*Extrusion page replaced*	*3.1.1*	*3.1.1*
01 / 02 / 2019	*Technical manual release notes amended*	*1.0*	*1.0*
01 / 02 / 2019	*Windows amended*	2.2.1	2.2.1

© ALSPEC
ALUMINIUM SPECIALITIES GROUP PTY LTD

McARTHUR 150 OFFSET POCKET FRAMING

Section 2.1
SPECIFICATION

ALUMINIUM
Aluminium frames should be manufactured using ALSPEC's McArthur 150 Offset Pocket Framing.

Refer to wind load tables for maximum panel heights and widths.

GLAZING
- Minimum glass/alpolic or composite thickness is 4mm.
- Maximum glass thickness is 10.38mm.
- Glazing wedges shall be ALSPEC's wedges for McArthur 150 Offset Pocket Framing to suit standard and captive glazing options.

HARDWARE
- All hardware as per ALSPEC Technical Manual.

FINISHES
- All powder coated material shall be produced to AS3715.
- All anodised material shall be produced to AS1231.

All products are available from ALSPEC (A.B.N. 63 001 252 259) as detailed in the "ALSPEC" Catalogue or on the Internet at www.alspec.com.au . All such framing is to be constructed, assembled and fixed to meet the requirements of AS2047 (windows in buildings), AS1170 (loading code). All glass, glazing rubbers, seals and gaskets shall be applied in accordance with the requirements of AS1288 (glass in buildings – selection and installation).

Fabricators of the McArthur 150mm Offset Pocket Framing should seek confirmation of design wind pressure and deflection criteria from the building designer.

© ALSPEC
ALUMINIUM SPECIALITIES GROUP PTY LTD

McARTHUR 150 OFFSET POCKET FRAMING

Section 2.2

LOADING TABLES

The following pages contain mullion span tables that may be used as a guide to the suitability of ALSPEC ALUMINIUM SYSTEMS framing for various wind loads and frame sizes.

The classification of a building is determined by the purpose for which it is designed, constructed or adapted for use. The determination of the buildings end use is essential in calculating a windows rating and performance capabilities.

AS2047-1999 classifies windows in three classes of building types and stipulates the different deflection/span ratio in each class. These classes are Housing, Residential Buildings and Commercial Buildings.

1. Housing has a span/150 when tested at the serviceability design wind pressure.
2. Residential Buildings have a span/180 when tested at the serviceability design wind pressure.
3. Commercial buildings have a span/250 when tested at the serviceability design wind pressure.

In most situations the Design Wind Pressure for a particular building should be available from the building designer or engineer. Where this is not available, the following tables may be used as a guide to some wind pressures for general areas.

For a window/door frame which is 2400mm high and 1200mm wide, refer to the table below;
Step 1: Determine the deflection/span ratio, L/180 OR L/250
Step 2: Determine the height
Step 3: Determine the width
Step 4: Determine the Maximum Design Pressure (Pa) either in maximum Serviceability load (S) or maximum Ultimate load (U) based on the height and width.

STEP 1 → **L/180**

Mullion / Interlock Height		Maximum Design Pressure (Pa)					
3000	S	1530	1041	803	667	583	529
	U	2295	1562	1205	1001	875	794
2700	S	2106	1440	1119	938	829	764
	U	3159	2160	1679	1407	1244	1146
STEP 2 → 2400	S	3015	2075	1629	← STEP 4		1171
	U	4523	3113	2444	2076	1866	1757
2100	S	4536	3153	2512	2177	2010	1959
	U	6804	4730	3768	3266	3015	2939
Mullion / Interlock Spacing		600	900	1200	1500	1800	2100

↑ STEP 3

© ALSPEC
ALUMINIUM SPECIALITIES GROUP PTY LTD

MULLION COMBINATION AS901 + AS904

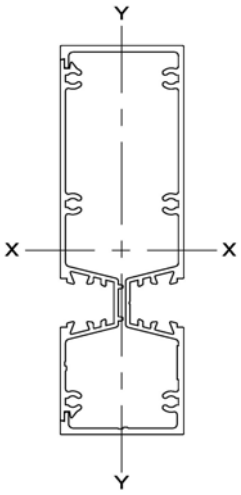

MULLION: AS901 + AS904
Ixx = 2795 x 10^3 mm^4
Max Stress = 110 Mpa
S = Serviceability limit state l/250
U = Ultimate limit state

L/250

Mullion Height		Maximum Design Pressure (Pa)								
4500	S	1090	730	550						
	U	2590	1740	1320						
4200	S	1340	900	680	560					
	U	2970	2000	1520	1230					
3900	S	1670	1130	860	700	600	530			
	U	3450	2320	1770	1440	1230	1080			
3600	S	2130	1440	1100	900	780	690	630	590	570
	U	4060	2740	2090	1710	1460	1290	1180	1100	1040
3300	S	2780	1880	1440	1190	1030	920	850	810	780
	U	4840	3270	2500	2050	1770	1580	1450	1370	1320
3000	S	3710	2520	1950	1620	1410	1280	1200	1150	1140
	U	5870	3980	3060	2530	2190	1980	1840	1760	1740
2700	S	5110	3490	2710	2270	2010	1850	1760	1740	1740
	U	7280	4950	3830	3190	2800	2560	2430	2380	2380
2400	S	6000	5030	3950	3360	3010	2840	2780	2780	2780
	U	9000	6330	4940	4160	3720	3470	3390	3390	3390
2100	S	6000	6000	6090	5280	4880	4750	4750	4750	4750
	U	9000	8400	6640	5700	5220	5070	5070	5070	5070
1800	S	6000	6000	6000	5590	5370	5370	5370	5370	5370
	U	9000	9000	9000	8380	8050	8050	8050	8050	8050
Mullion Spacing		**600**	**900**	**1200**	**1500**	**1800**	**2100**	**2400**	**2700**	**3000**

This table is based on theoretical section properties

© ALSPEC
ALUMINIUM SPECIALITIES GROUP PTY LTD

MULLION COMBINATION AS905 + AS906

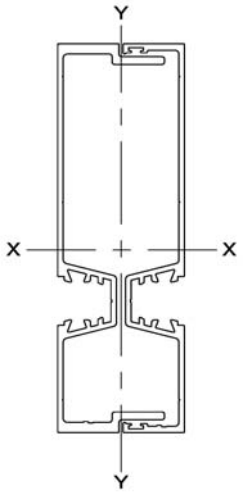

MULLION: AS905 + AS906
Ixx = 3233 x 10^3 mm^4
Max Stress = 110 Mpa
S = Serviceability limit state l/250
U = Ultimate limit state

L/250

Mullion Height		Maximum Design Pressure (Pa)								
5100	S	860	580							
	U	2310	1550							
4800	S	1030	690	520						
	U	2610	1750	1330						
4500	S	1260	840	640	520					
	U	2980	200	1510	1230					
4200	S	1550	1040	790	640	550				
	U	3420	2300	1740	1420	1200				
3900	S	1940	1310	990	810	690	610	560	520	
	U	3970	2670	2030	1660	1410	1240	1120	1040	
3600	S	2470	1670	1270	1050	900	800	730	690	660
	U	4670	3150	2400	1960	1680	1490	1450	1260	1200
3300	S	3210	2180	1670	1380	1190	1070	990	940	910
	U	5570	3760	2880	2360	2040	1820	1670	1570	1520
3000	S	4290	2920	2250	1870	1630	1480	1390	1330	1320
	U	6720	4580	3520	2910	2520	2270	2120	2030	2000
2700	S	5910	4040	3140	2630	2320	2140	2040	2010	2010
	U	8370	5700	4400	3670	3220	2940	2790	2740	2740
2400	S	6000	5820	4570	3880	3490	3290	3220	3220	3220
	U	9000	7290	5680	4790	4270	3990	3900	3900	3900
2100	S	6000	6000	7050	6110	5640	5500	5500	5500	5500
	U	9000	9000	7630	6560	6010	5830	5830	5830	5830
1800	S	6000	6000	6000	6000	6000	6000	6000	6000	6000
	U	9000	9000	9000	9000	9000	9000	9000	9000	9000
Mullion Spacing		**600**	**900**	**1200**	**1500**	**1800**	**2100**	**2400**	**2700**	**3000**

This table is based on theoretical section properties

© ALSPEC
ALUMINIUM SPECIALITIES GROUP PTY LTD

MULLION COMBINATION AS907 + AS908

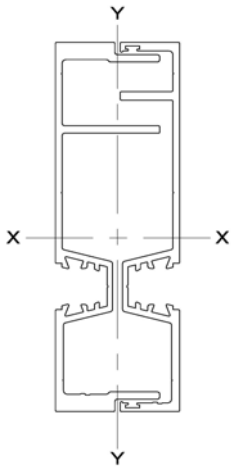

MULLION: AS907 + AS908
Ixx = 4593x 10^3 mm^4
Max Stress = 110 Mpa
S = Serviceability limit state l/250
U = Ultimate limit state

L/250

Mullion Height		Maximum Design Pressure (Pa)								
5100	S	1230	820	620						
	U	3430	2300	1740						
4800	S	1470	990	750	610					
	U	3880	2600	1970	1590					
4500	S	1790	1200	910	740	630	550			
	U	4420	2960	2250	1820	1540	1350			
4200	S	2200	1480	1130	920	780	690	620	570	
	U	5070	3410	2590	2100	1790	1570	1410	1300	
3900	S	2760	1860	1420	1160	990	880	800	740	700
	U	5890	3970	3020	2460	2090	1850	1670	1540	1450
3600	S	3000	2370	1810	1490	1280	1140	1040	980	930
	U	6930	4670	3560	2910	2490	2210	2010	1870	1780
3300	S	3000	3000	2380	1960	1700	1520	1410	1330	1290
	U	8260	5580	4270	3510	3020	2690	2480	2330	2250
3000	S	3000	3000	3000	2660	2320	2110	1970	1900	1870
	U	9000	6790	5220	4310	3740	3370	3140	3000	2960
2700	S	3000	3000	3000	3000	3000	3000	2900	2860	2900
	U	9000	8450	6530	5440	4770	4360	4140	4060	3980
2400	S	3000	3000	3000	3000	3000	3000	3000	3000	3000
	U	9000	9000	8420	7100	6330	5920	5790	5670	5560
2100	S	3000	3000	3000	3000	3000	3000	3000	3000	3000
	U	9000	9000	9000	9000	8900	8640	8460	8290	8130
1800	S	3000	3000	3000	3000	3000	3000	3000	3000	3000
	U	9000	9000	9000	9000	9000	9000	9000	9000	9000
Mullion Spacing		**600**	**900**	**1200**	**1500**	**1800**	**2100**	**2400**	**2700**	**3000**

This table is based on theoretical section properties

© ALSPEC
ALUMINIUM SPECIALITIES GROUP PTY LTD

101.6mm TRANSOM AS25C + AS4C + AS3

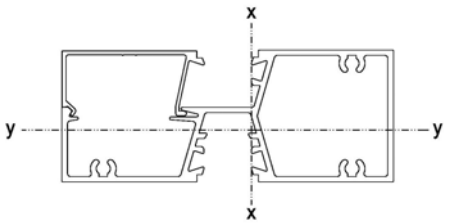

101.6mm TRANSOM: AS25C + AS3

Ixx = 613 x 10^3 mm^4
Iyy = 152 x 10^3 mm^4

Max Stress = 110 Mpa
S = Serviceability limit state l/250
U = Ultimate limit state

L/250

Transom Centres	Maximum Design Loads							
2400	S (Pa)	3000	3000	1740				
	U (Pa)	6550	3550	2148				
	Max Weight (kg)	120	120	120				
2100	S (Pa)	3000	3000	1830	1040			
	U (Pa)	6900	3740	2261	1500			
	Max Weight (kg)	120	120	120	75			
1800	S (Pa)	3000	3000	1930	1070			
	U (Pa)	7260	3940	2380	1540			
	Max Weight (kg)	120	120	120	75			
1500	S (Pa)	3000	3000	2000	1160			
	U (Pa)	7650	4150	2480	1690			
	Max Weight (kg)	120	120	120	75			
1200	S (Pa)	3000	3000	2230	1330	860		
	U (Pa)	8050	4370	2800	1960	1460		
	Max Weight (kg)	120	120	120	75	50		
900	S (Pa)	3000	3000	2740	1680	1100	760	
	U (Pa)	8810	5210	3470	2490	1870	1460	
	Max Weight (kg)	120	120	120	75	50	36	
Transom length		**1200**	**1500**	**1800**	**2100**	**2400**	**2700**	**3000**

This table is based on theoretical section properties

Maximum glass weights have been determined to limit deflection to 5mm, using setting block locations at 1/8 points

© ALSPEC
ALUMINIUM SPECIALITIES GROUP PTY LTD

101.6mm TRANSOM AS2C + AS4C + AS3

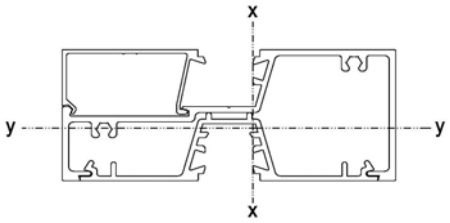

101.6mm TRANSOM: AS2C + AS4C + AS3

Ixx = 756 x 10^3 mm^4
Iyy = 110 x 10^3 mm^4

Max Stress = 110 Mpa
S = Serviceability limit state l/250
U = Ultimate limit state

L/250

Transom Centres	Maximum Design Loads							
2400	S (Pa)	3000	2560	2140				
	U (Pa)	9000	4550	2780				
	Max Weight (Kg)	120	120	70				
2100	S (Pa)	3000	2700	2260	1280			
	U (Pa)	-190270	4790	2930	1940			
	Max Weight (Kg)	120	120	70	45			
1800	S (Pa)	3000	2850	2380	1320			
	U (Pa)	9000	5050	3080	1990			
	Max Weight (Kg)	120	120	70	45			
1500	S (Pa)	3000	3000	2470	1430			
	U (Pa)	9000	5320	3200	2180			
	Max Weight (Kg)	120	120	70	45			
1200	S (Pa)	3000	3000	2750	1650	1070		
	U (Pa)	9000	5640	3610	2540	1890		
	Max Weight (Kg)	120	120	70	45	30		
900	S (Pa)	3000	3000	3000	2070	1360		
	U (Pa)	9000	6720	4480	3210	2420		
	Max Weight (Kg)	120	120	70	45	30		
Transom length		**1200**	**1500**	**1800**	**2100**	**2400**	**2700**	**3000**

This table is based on theoretical section properties

Maximum glass weights have been determined to limit deflection to 5mm, using setting block locations at 1/8 points

© ALSPEC
ALUMINIUM SPECIALITIES GROUP PTY LTD

150mm TRANSOM AS902 + AS904 + AS3

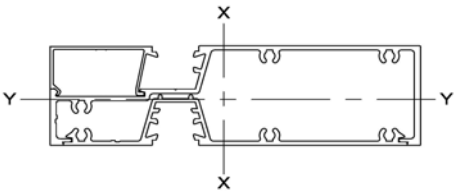

150mm TRANSOM AS902 + AS904 + AS3
Ixx = 2463 x 10^3 mm^4 **Iyy** = 134 x 10^3 mm^4 Max Stress = 110 Mpa S = Serviceability limit state l/250 U = Ultimate limit state

L/250

Transom Centres	Maximum Design Loads								
2400	S (Pa)	3000	3000	3000					
	U (Pa)	9000	9000	6330					
	Max Weight (Kg)	120	120	95					
2100	S (Pa)	3000	3000	3000	3000				
	U (Pa)	9000	9000	6660	4420				
	Max Weight (Kg)	120	120	95	60				
1800	S (Pa)	3000	3000	3000	3000				
	U (Pa)	9000	9000	7010	4550				
	Max Weight (Kg)	120	120	95	60				
1500	S (Pa)	3000	3000	3000	3000				
	U (Pa)	9000	9000	7300	4970				
	Max Weight (Kg)	120	120	95	60				
1200	S (Pa)	3000	3000	3000	3000	3000			
	U (Pa)	9000	9000	8230	5780	4300			
	Max Weight (Kg)	120	120	95	60	40			
900	S (Pa)	3000	3000	3000	3000	3000			
	U (Pa)	9000	9000	9000	7320	5520			
	Max Weight (Kg)	120	120	95	60	40			
Transom length		**1200**	**1500**	**1800**	**2100**	**2400**	**2700**	**3000**	

This table is based on theoretical section properties

Maximum glass weights have been determined to limit deflection to 5mm, using setting block locations at 1/8 points

© ALSPEC
ALUMINIUM SPECIALITIES GROUP PTY LTD

McARTHUR 150 OFFSET POCKET FRAMING

Section 2.3

TEST REPORTS RESULTS - AS2047

Test report: AS12-186

McARTHUR 150mm OFFSET POCKET FRAMING

Test sample size.....2.7m H x 2.2m W

Serviceability load @ L/250.....±3.2 kPa

Ultimate load.....+5.36 kPa
-5.37 kPa

Water penetration.....1000 Pa

Air infiltration @75Pa.....+0.05 L/s/m²
-0.04 L/s/m²
@150Pa.....+0.02 L/s/m²
-0.03 L/s/m²

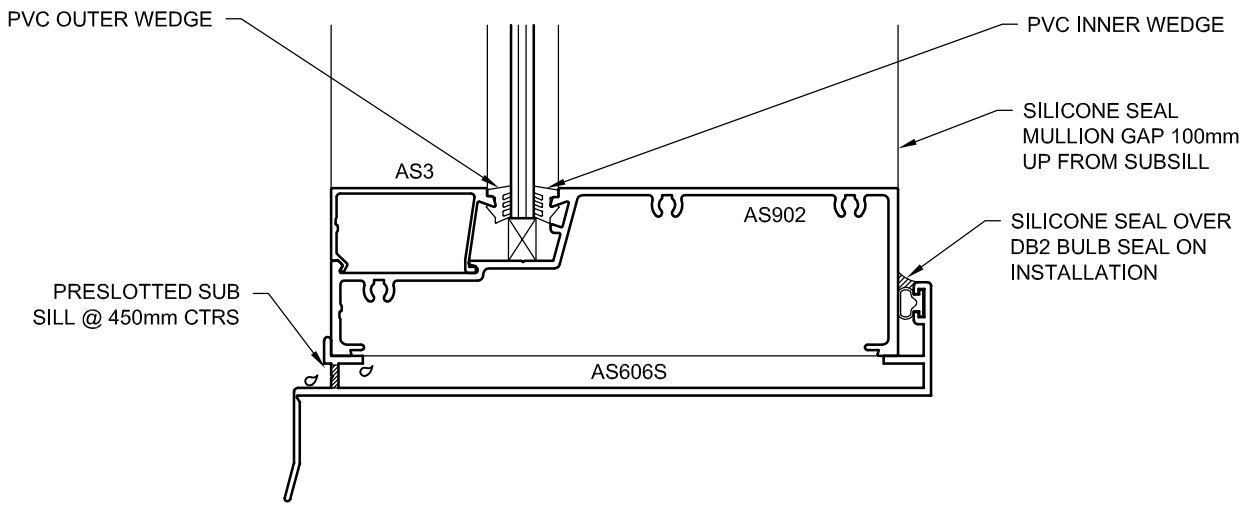

DISCLAIMER
Please note that the test results shown above reflect specific configurations of a system and are representative only. If a specific high wind load or a different configuration (i.e. changes to frames, transoms, mullions) is required on a project please discuss with ALSPEC prior to commencement.

EXTRUSIONS

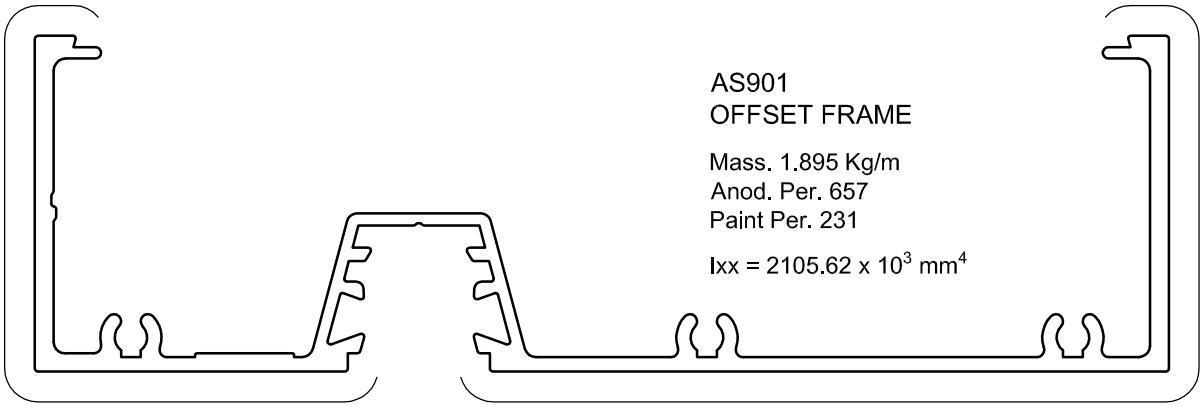

AS901
OFFSET FRAME

Mass. 1.895 Kg/m
Anod. Per. 657
Paint Per. 231

Ixx = 2105.62 x 10^3 mm^4

VISIBLE SURFACES

VISIBLE SURFACE

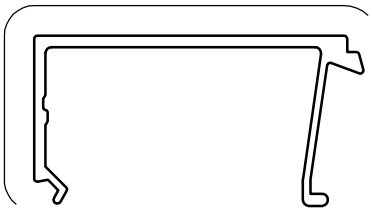

AS3
SILL BEAD

Mass. 0.351 Kg/m
Anod. Per. 181
Paint Per. 100

VISIBLE SURFACES

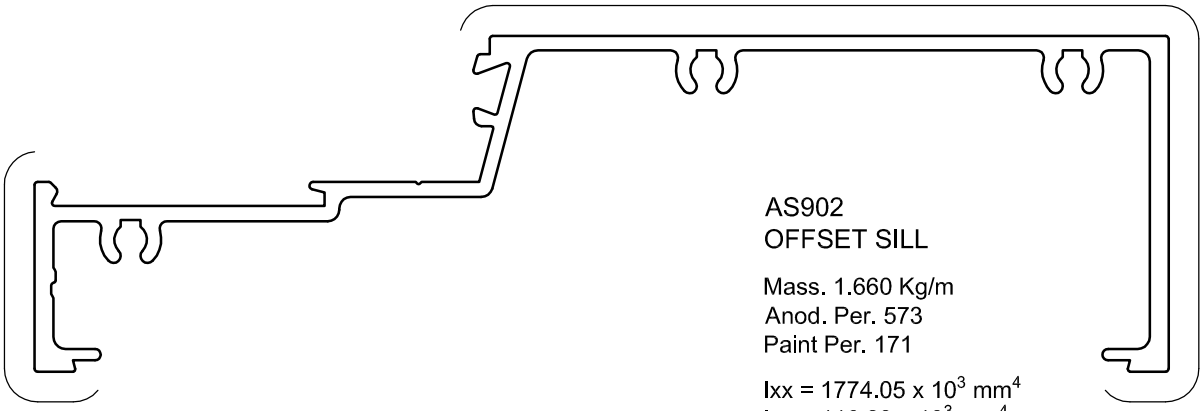

AS902
OFFSET SILL

Mass. 1.660 Kg/m
Anod. Per. 573
Paint Per. 171

Ixx = 1774.05 x 10^3 mm^4
Iyy = 116.89 x 10^3 mm^4

© ALSPEC
ALUMINIUM SPECIALITIES GROUP PTY LTD

EXTRUSIONS

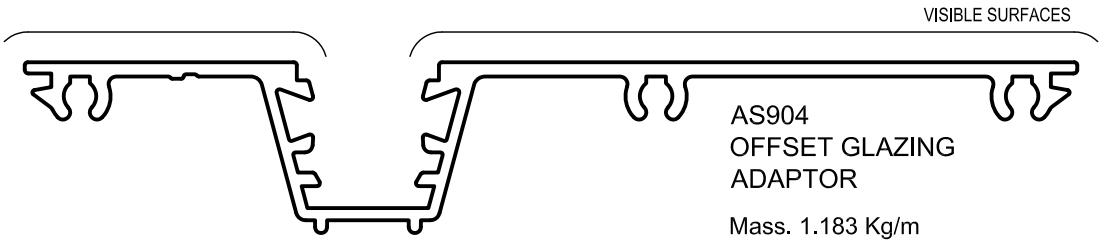

AS904
OFFSET GLAZING
ADAPTOR

Mass. 1.183 Kg/m
Anod. Per. 457
Paint Per. 121

Ixx = 689.36 x 10^3 mm^4
Iyy = 16.83 x 10^3 mm^4

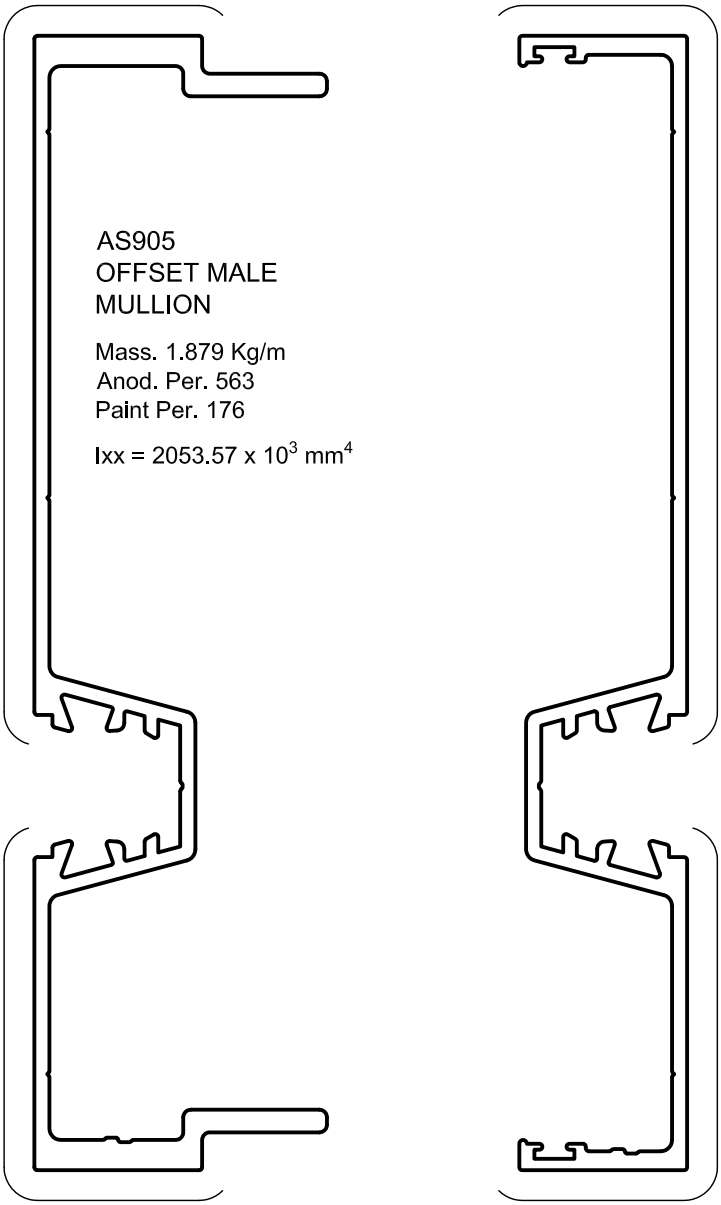

AS905
OFFSET MALE
MULLION

Mass. 1.879 Kg/m
Anod. Per. 563
Paint Per. 176

Ixx = 2053.57 x 10^3 mm^4

AS906
OFFSET FEMALE
MULLION

Mass. 1.394 Kg/m
Anod. Per. 505
Paint Per. 176

Ixx = 1179.62 x 10^3 mm^4

© ALSPEC
ALUMINIUM SPECIALITIES GROUP PTY LTD

EXTRUSIONS

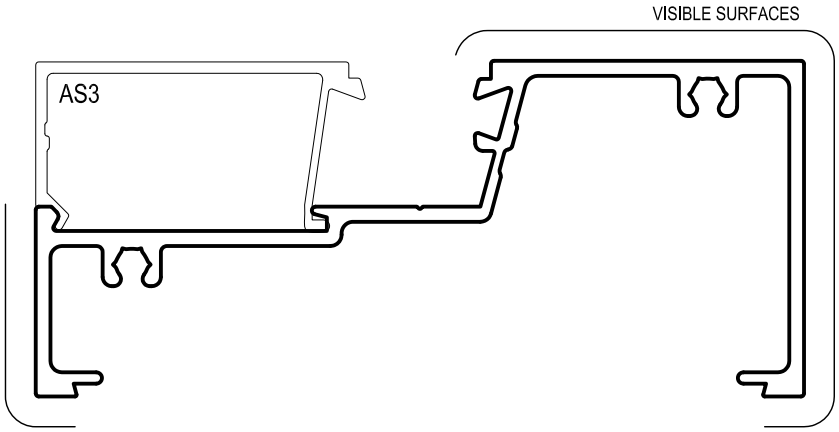

AS2C
CAPTIVE SILL

Mass. 1.258 Kg/m
Anod. Per. 455
Paint Per. 122

Ixx = 630.50 x 10^3 mm^4
Iyy = 83.00 x 10^3 mm^4

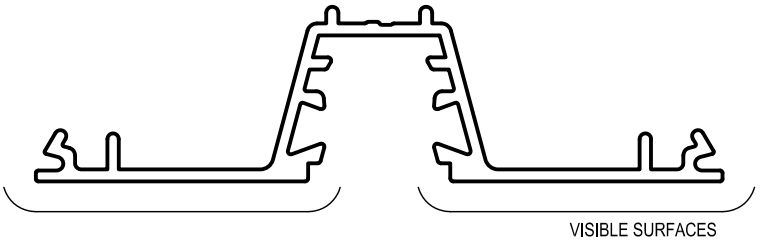

AS4C
CAPTIVE GLAZING
ADAPTOR

Mass. 0.778 Kg/m
Anod. Per. 335
Paint Per. 100

Ixx = 165.30 x 10^3 mm^4
Iyy = 14.7 x 10^3 mm^4

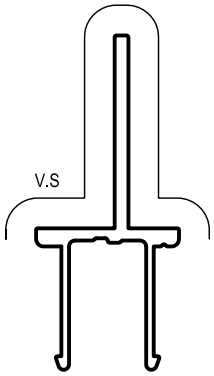

AS851
50mm AWNING
ADAPTOR

Mass. 0.317 Kg/m
Anod. Per. 160
Paint Per. 100

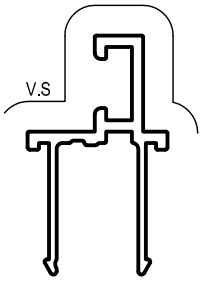

AS7
45mm DOOR
STOP

Mass. 0.269 Kg/m
Anod. Per. 156
Paint Per. 100

© ALSPEC
ALUMINIUM SPECIALITIES GROUP PTY LTD

EXTRUSIONS

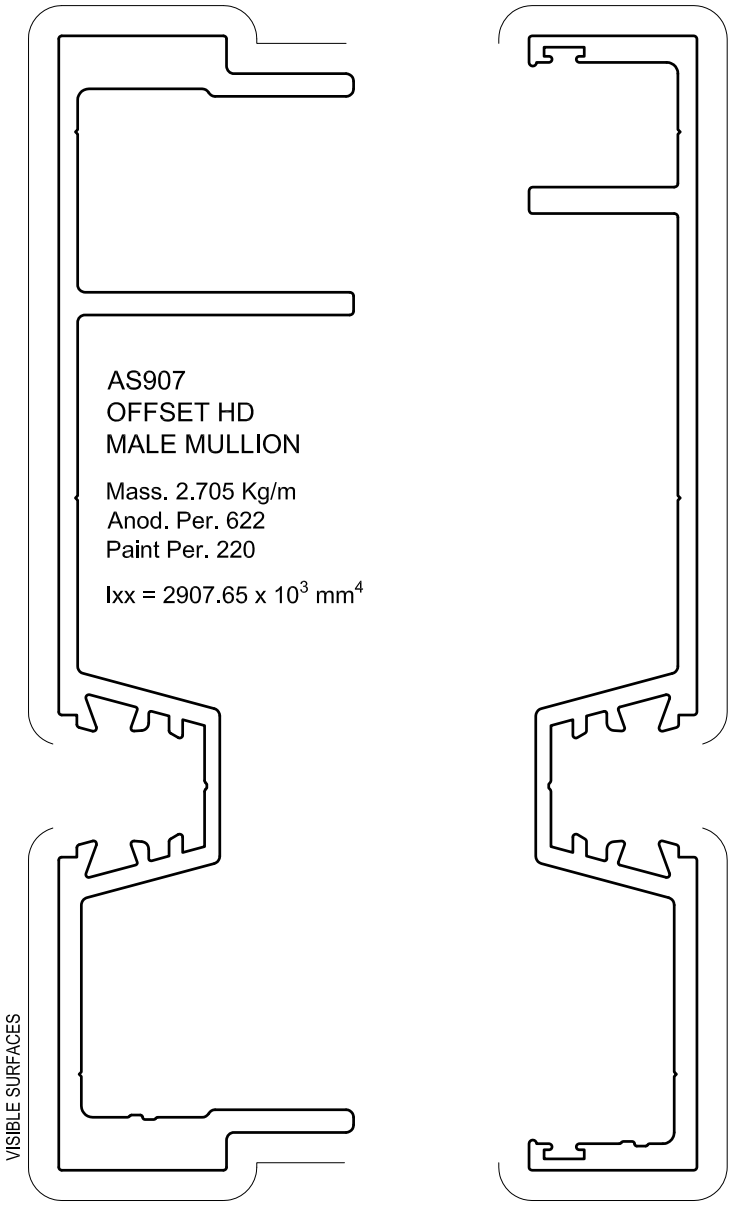

© ALSPEC
ALUMINIUM SPECIALITIES GROUP PTY LTD

GLAZING WEDGES

GR2 Glazing Wedge (to suit 2mm gap)	
Part # 1376012	Part # 1376011
Finish: PVC - Black (034)	Finish: PVC - Black (034)
Qty: 100m Roll	Qty: Per / m

GR2S Glazing Wedge (to suit 2mm gap)
Part # 1376254
Finish: Santoprene - Black (034)
Qty: 100m Roll

GR3 Glazing Wedge (to suit 4mm gap)	
Part # 1376015	Part # 1376016
Finish: PVC - Black (034)	Finish: PVC - Black (034)
Qty: 100m Roll	Qty: Per / m

GR3S Glazing Wedge (to suit 4mm gap)
Part # 1376069
Finish: Santoprene - Black (034)
Qty: 100m Roll

GR4 Glazing Wedge (to suit 5mm gap)	
Part # 1376021	Part # 1376022
Finish: PVC - Black (034)	Finish: PVC - Black (034)
Qty: 100m Roll	Qty: Per / m

CE2 2mm Backing Gasket - Co-Extruded
Part # 1376341
Finish: PVC - Black (034)
Qty: 150m Roll

© ALSPEC
ALUMINIUM SPECIALITIES GROUP PTY LTD

GLAZING WEDGES

CE3 4mm Backing Gasket - Co-Extruded	
Part # 1376343	Part # 1376326
Finish: PVC - Black (034)	Finish: PVC - Black (034)
Qty: 100m Roll	Qty: Per / m

MS6 Co-Extruded Mullion Seal
Part # 1376449
Finish: Santoprene Co-Ex - Black (034)
Qty: 100m Roll

DB1 Door Stop Buffer	
Part # 1376402	Part # 1376403
Finish: PVC - Black (034)	Finish: PVC - Grey (036)
Qty: 100m Roll	

© ALSPEC
ALUMINIUM SPECIALITIES GROUP PTY LTD

ACCESSORIES

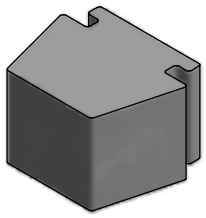

McARTHUR Drain Block
Part # 1385590
Finish: Foam - Grey (036)
Qty: Set (20)

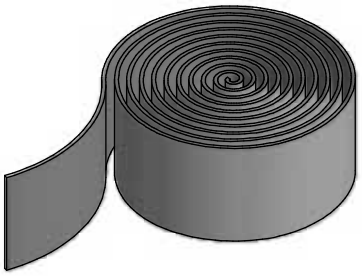

Frame Joint Gasket 45mm x 1.6mm
Part # 1385512
Finish: PVC Foam - Black (034) or Grey (036)
Qty: 45.7 Metre Roll

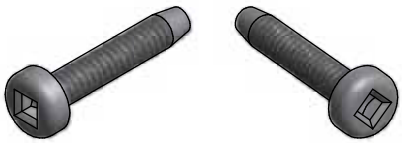

10g x 25mm (1") Pan Square Quad Screws
Part # 1382519
Finish: Stainless Steel (OG8)
Qty: 500 per Box

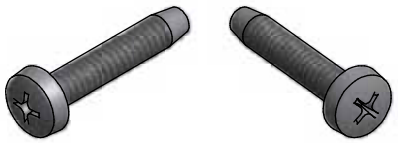

10g x 25mm (1") Pan Self Tapping Screws
Part # 1382054
Finish: Stainless Steel
Qty: 500 per Box

© ALSPEC
ALUMINIUM SPECIALITIES GROUP PTY LTD

TYPICAL ELEVATION

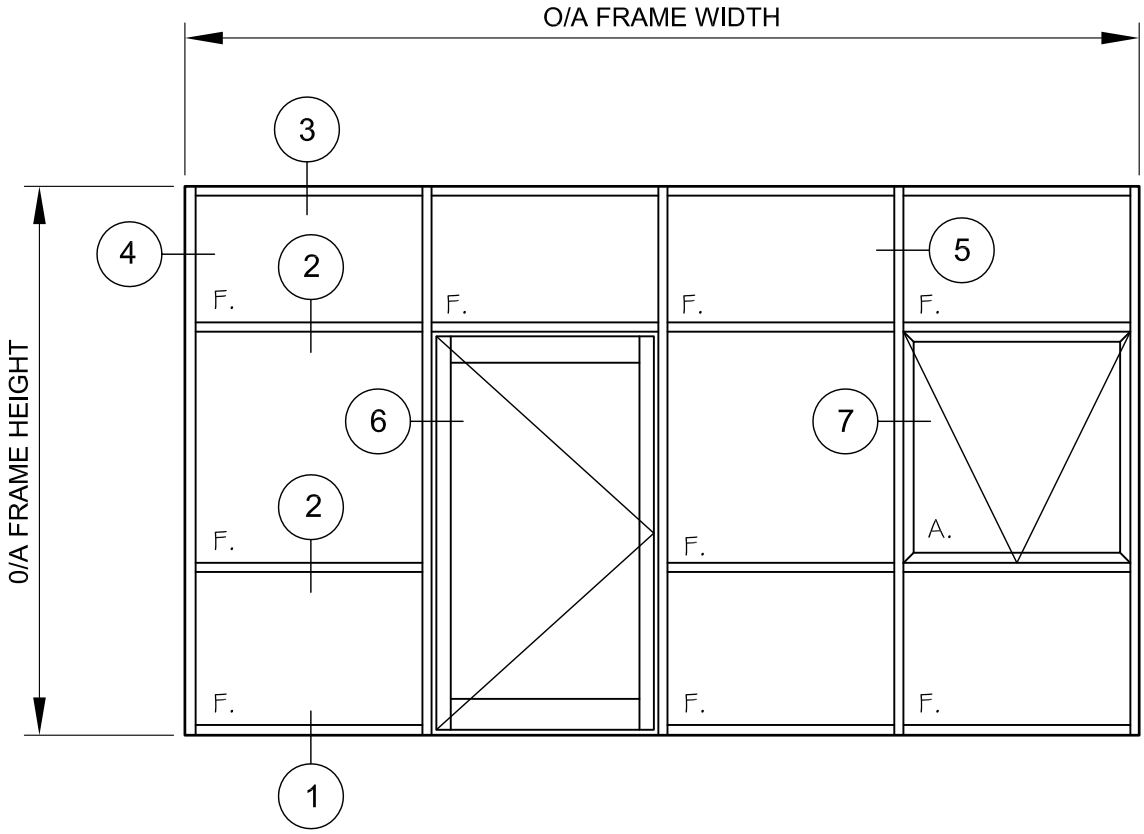

© ALSPEC
ALUMINIUM SPECIALITIES GROUP PTY LTD

TYPICAL HEAD AND SILL DETAILS - 101.6mm TRANSOM

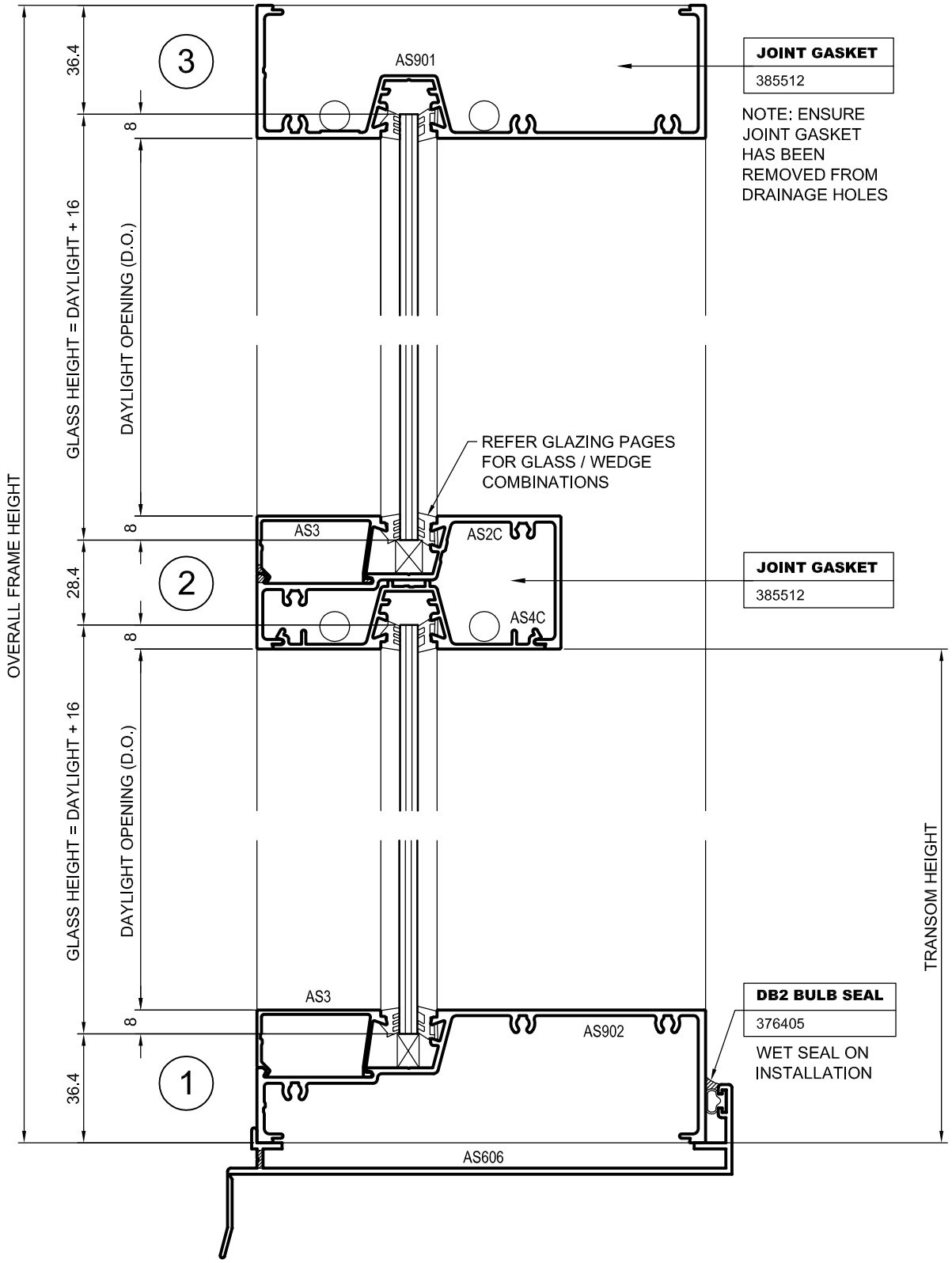

© ALSPEC
ALUMINIUM SPECIALITIES GROUP PTY LTD

TYPICAL HEAD AND SILL DETAILS - 150mm TRANSOM

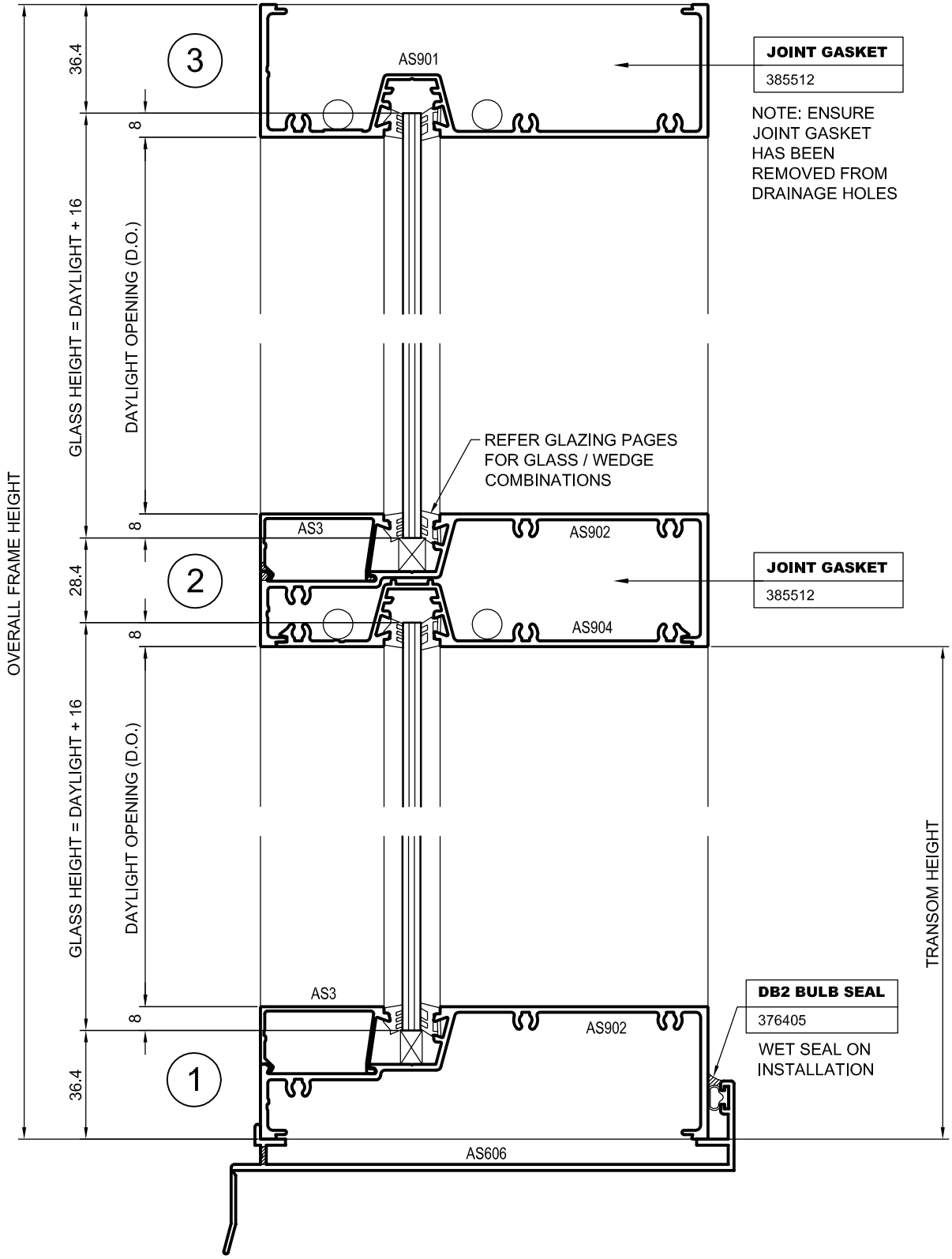

© ALSPEC
ALUMINIUM SPECIALITIES GROUP PTY LTD

TYPICAL JAMB AND MULLION DETAILS

** NOMINAL DIMENSIONS ONLY. MAY VARY DUE TO PROJECT REQUIREMENTS

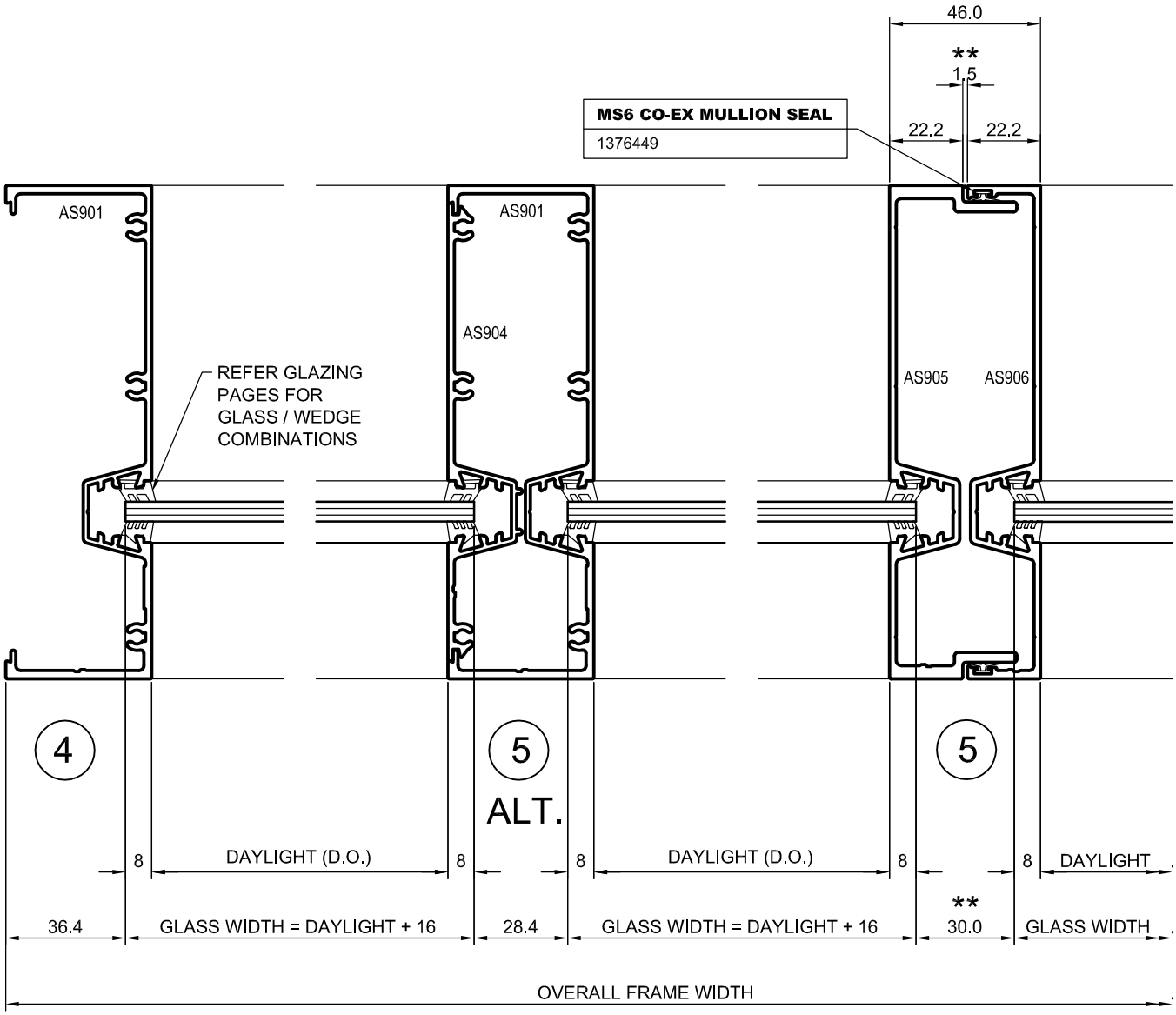

© ALSPEC
ALUMINIUM SPECIALITIES GROUP PTY LTD

DOOR JAMB DETAILS

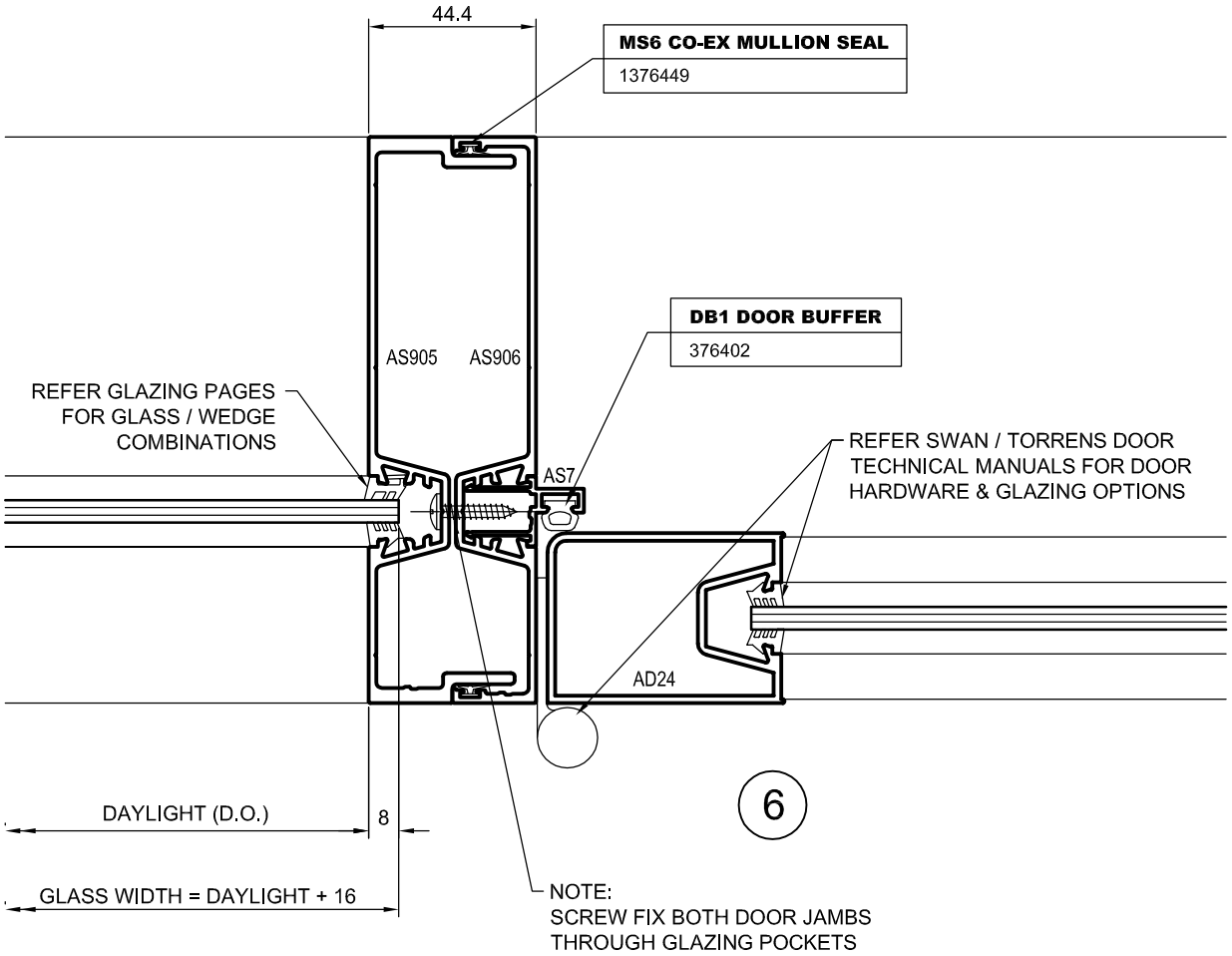

© ALSPEC
ALUMINIUM SPECIALITIES GROUP PTY LTD

AS85 AWNING JAMB DETAIL

** NOMINAL DIMENSIONS ONLY. MAY VARY DUE TO PROJECT REQUIREMENTS

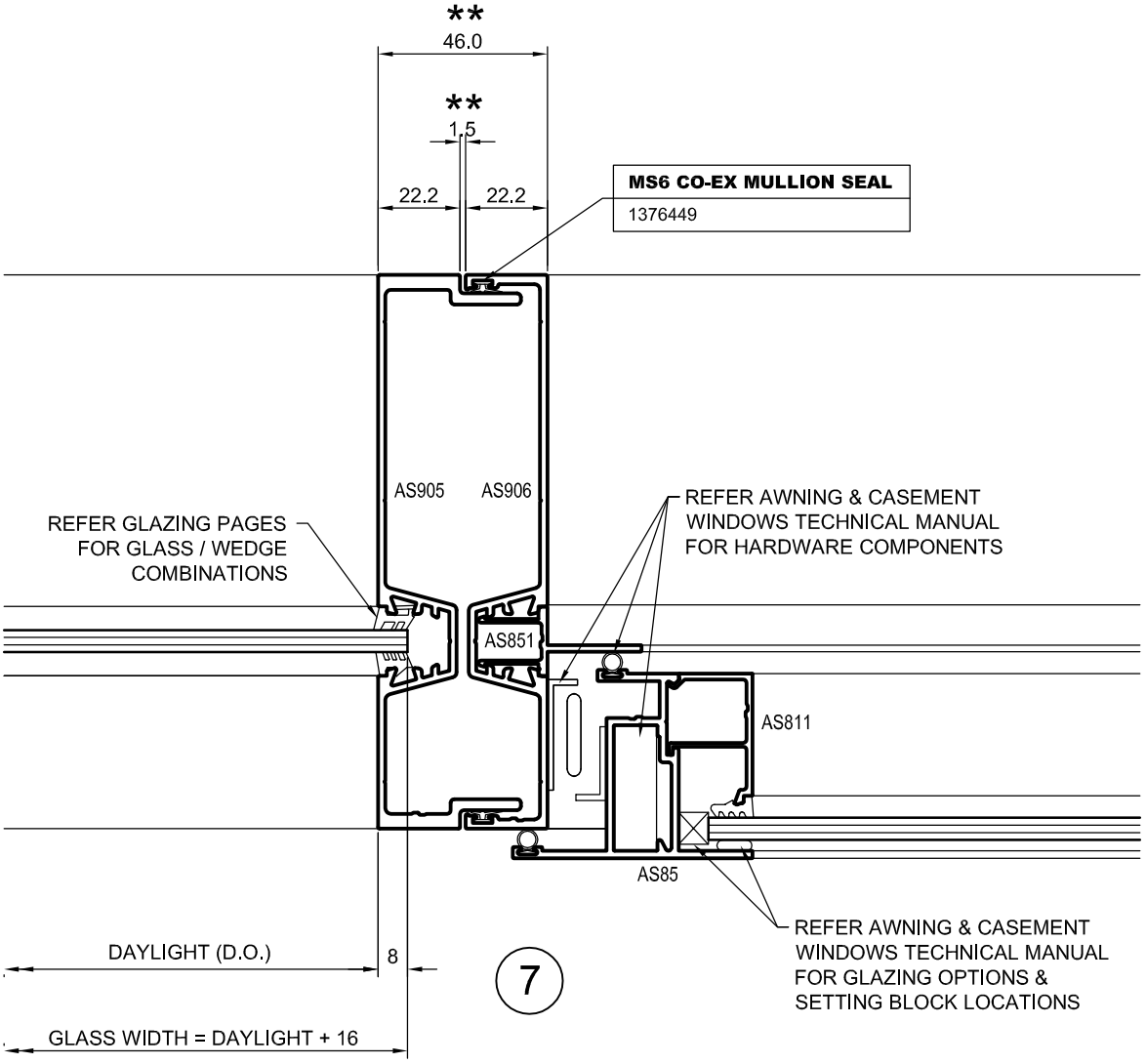

© ALSPEC
ALUMINIUM SPECIALITIES GROUP PTY LTD

JAMB PREPARATION - 101.6mm TRANSOM

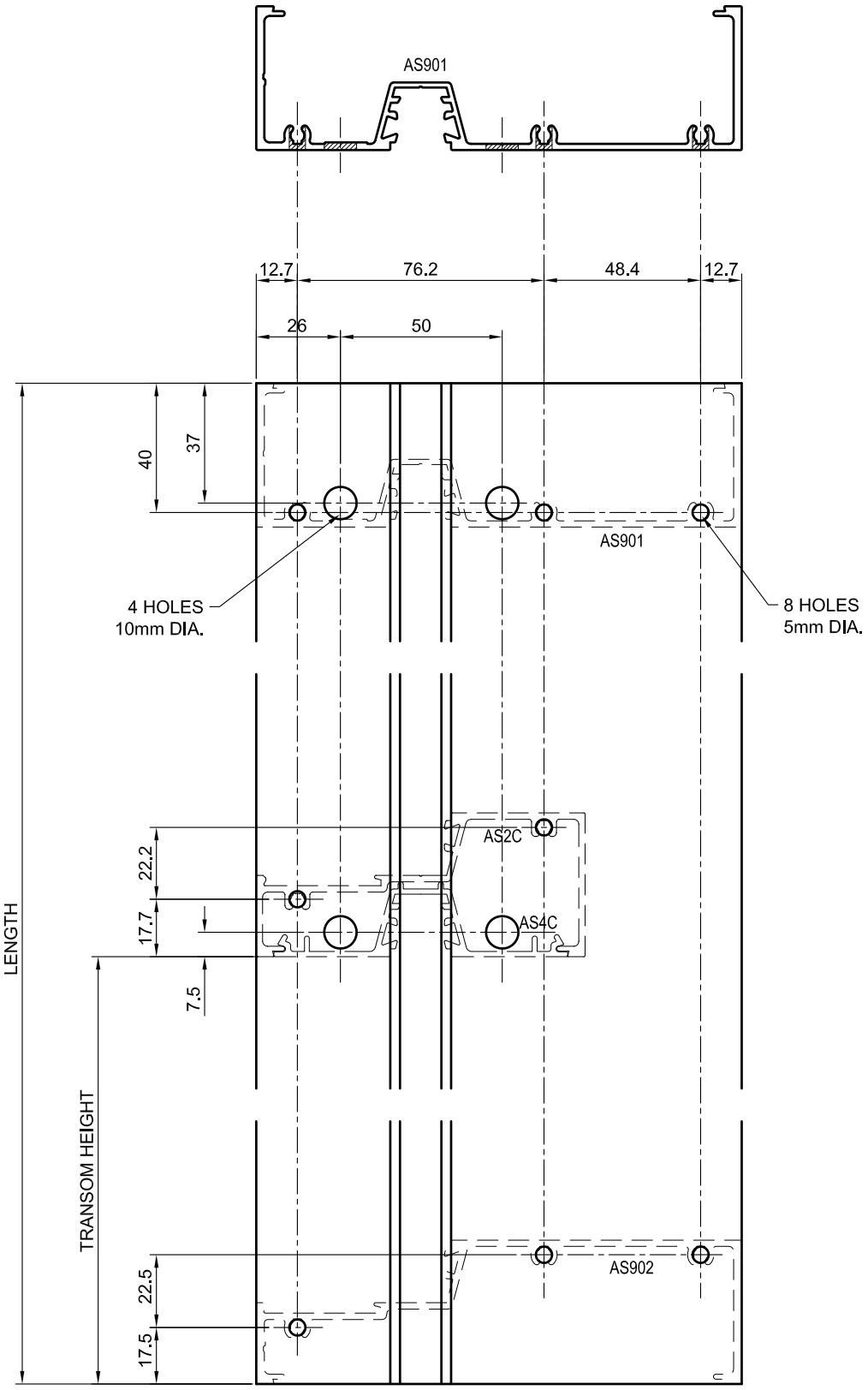

L.H. DRAWN
R.H OPPOSITE

GLAZING ADAPTOR PREPARATION - 101.6mm TRANSOM

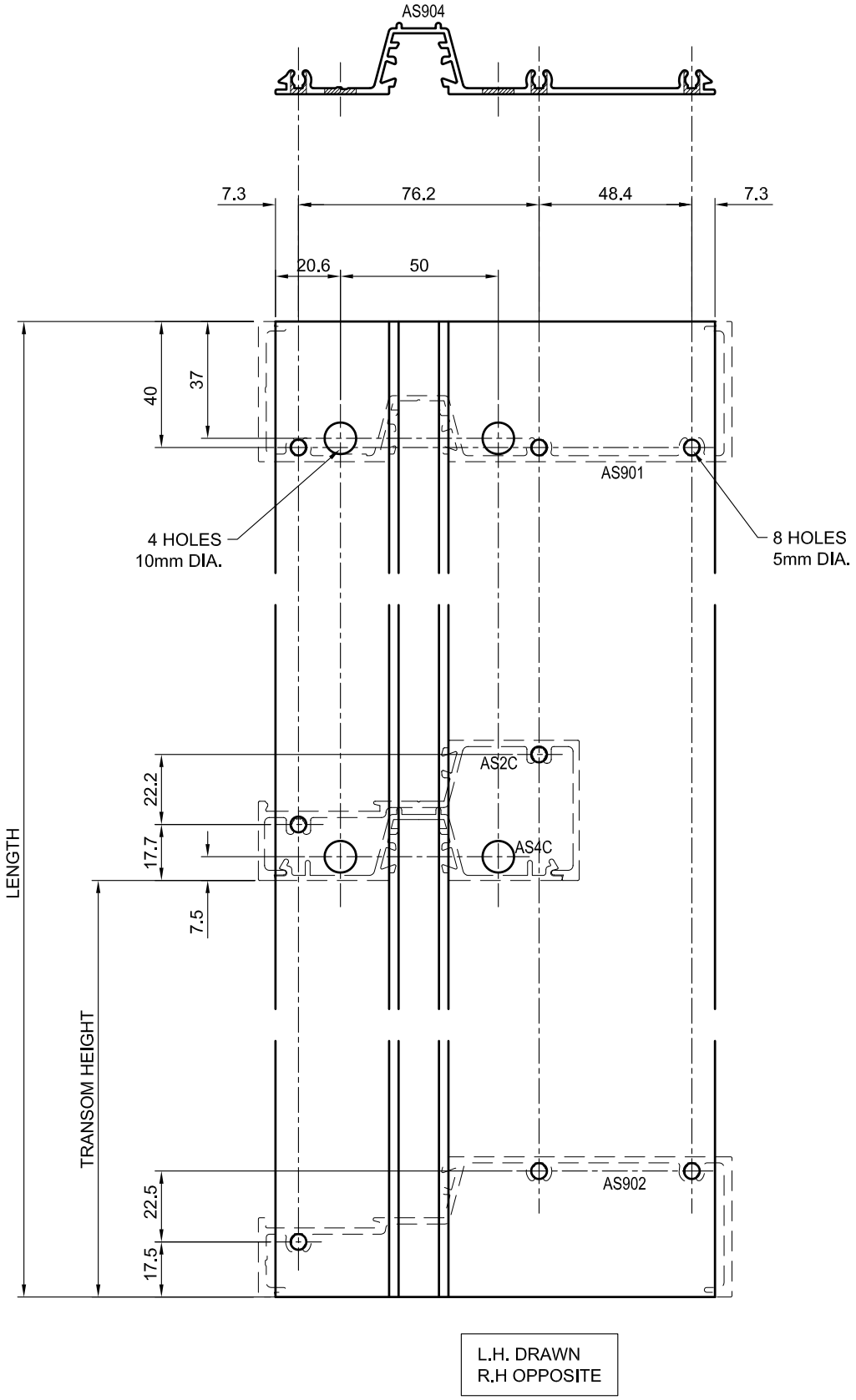

© ALSPEC
ALUMINIUM SPECIALITIES GROUP PTY LTD

MULLION PREPARATION - 101.6mm TRANSOM

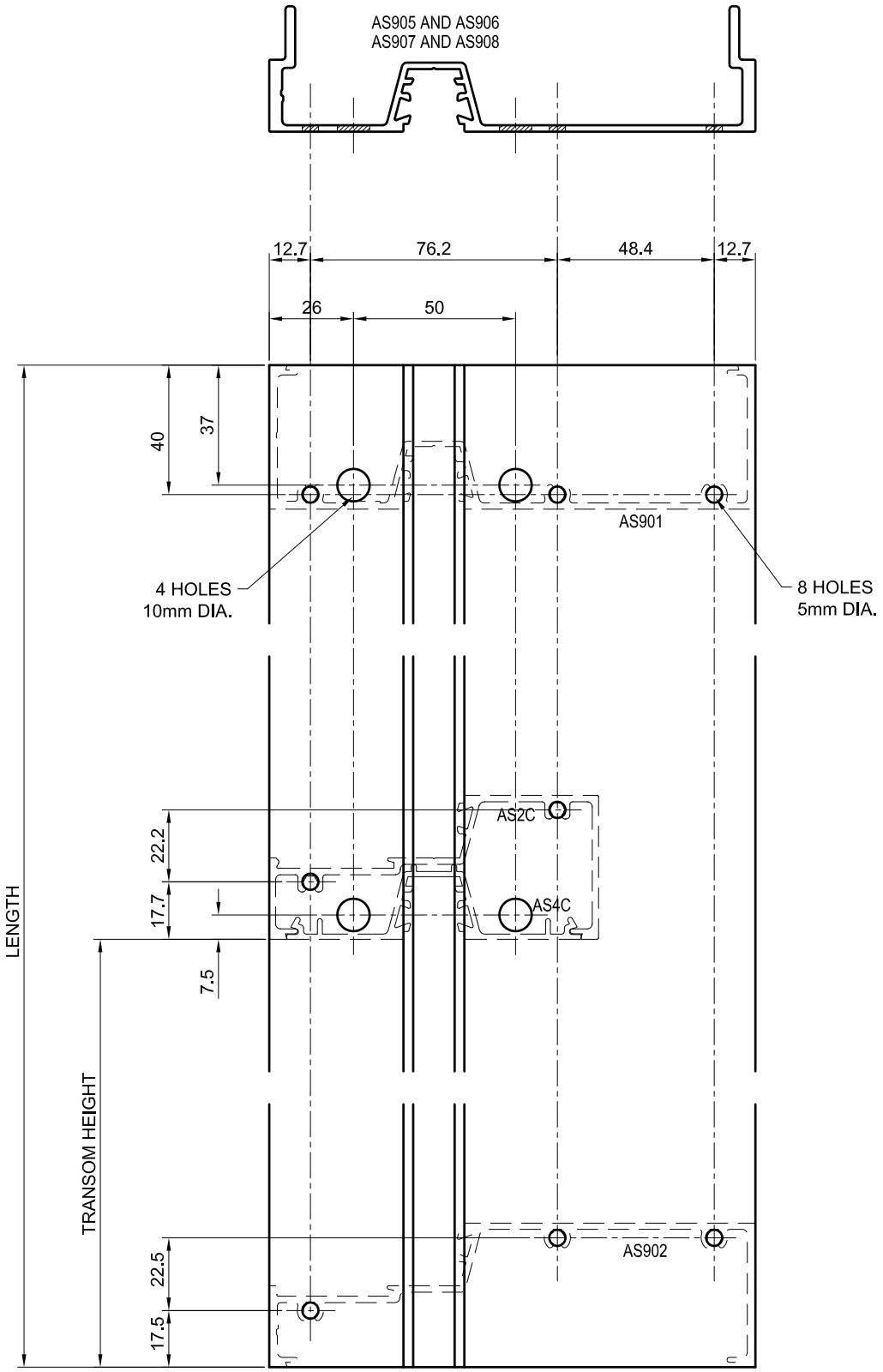

L.H. DRAWN
R.H OPPOSITE

© ALSPEC
ALUMINIUM SPECIALITIES GROUP PTY LTD

JAMB PREPARATION - 150mm TRANSOM

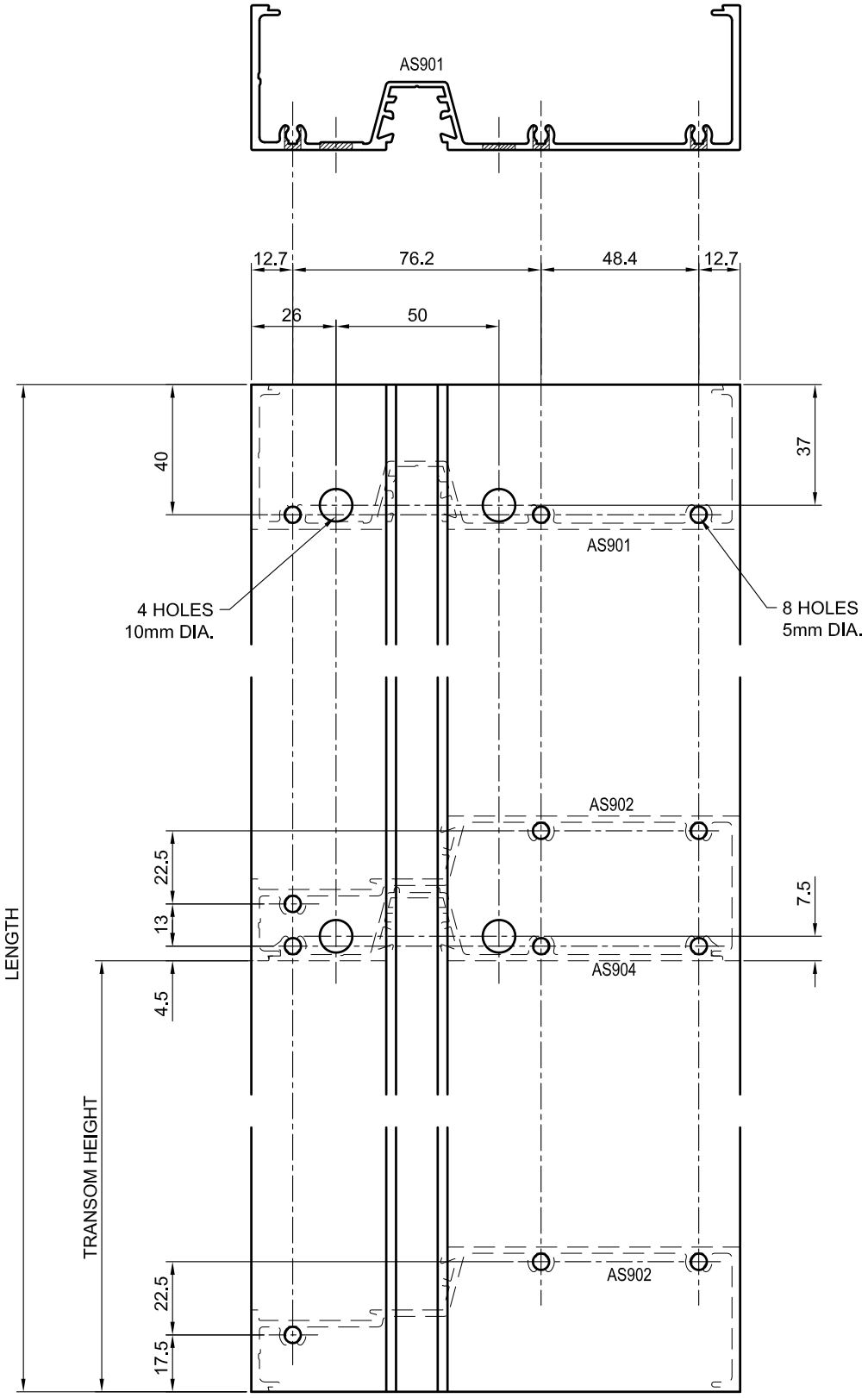

L.H. DRAWN
R.H OPPOSITE

© ALSPEC
ALUMINIUM SPECIALITIES GROUP PTY LTD

GLAZING ADAPTOR PREPARATION - 150mm TRANSOM

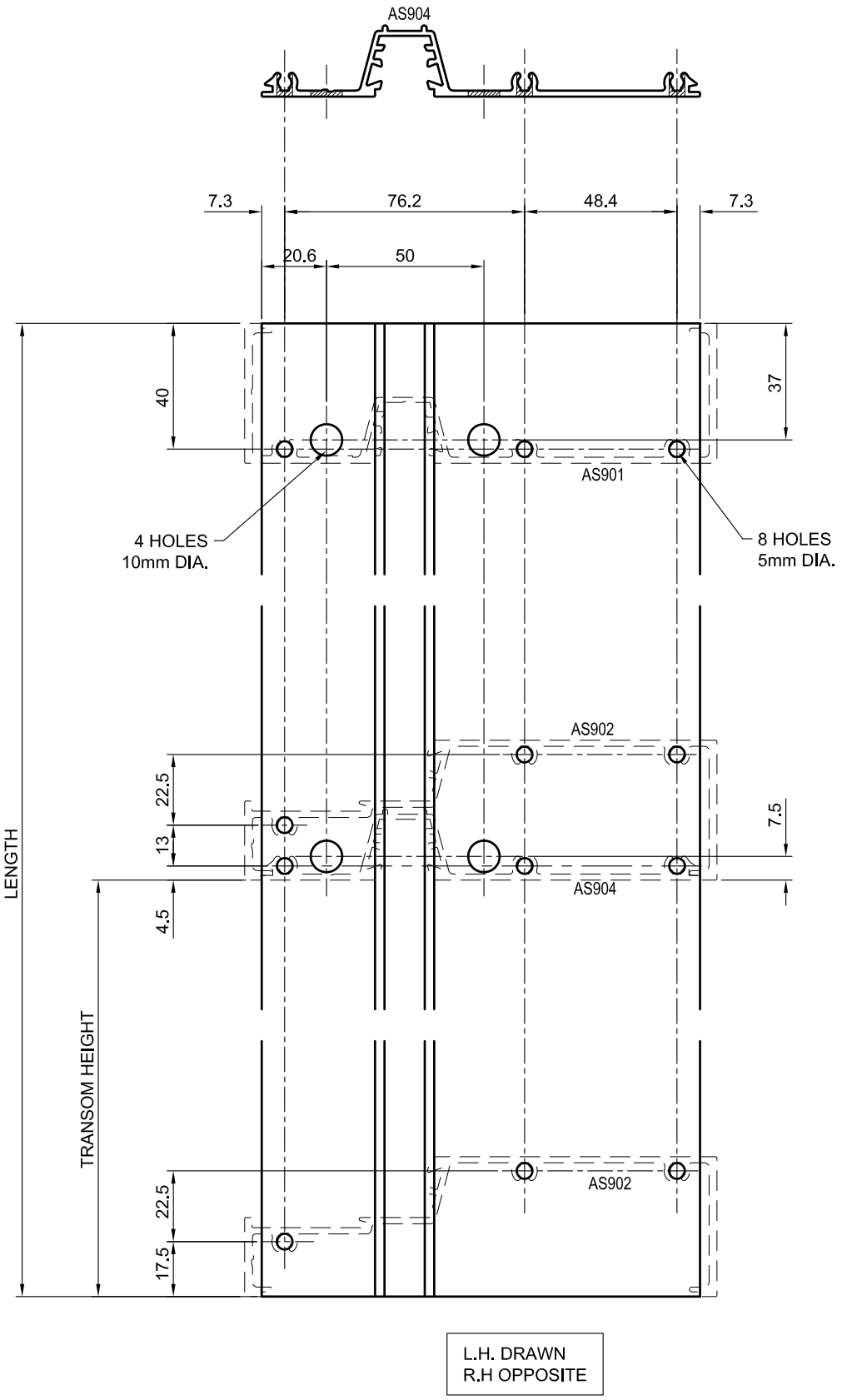

MULLION PREPARATION - 150mm TRANSOM

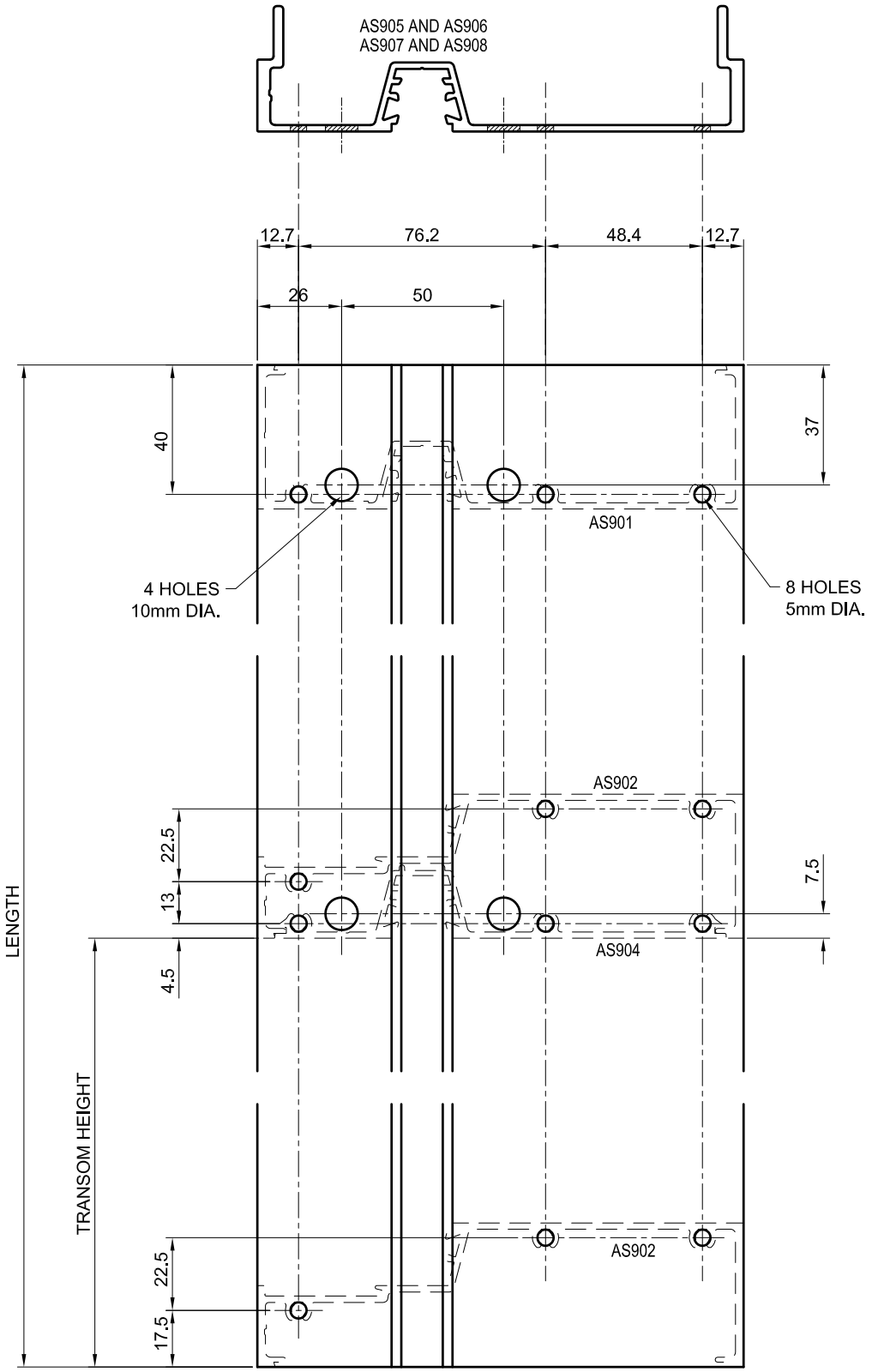

L.H. DRAWN
R.H OPPOSITE

TYPICAL TRANSOM DRAINAGE

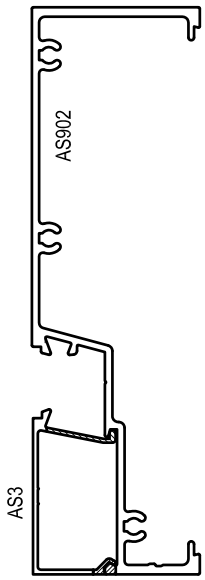

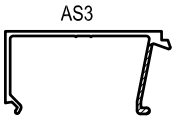

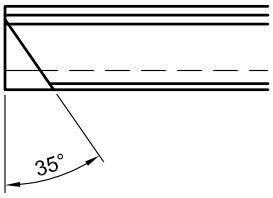

DRAINAGE CUT BACK
INSIDE LEG OF BEAD
ONLY - BOTH ENDS

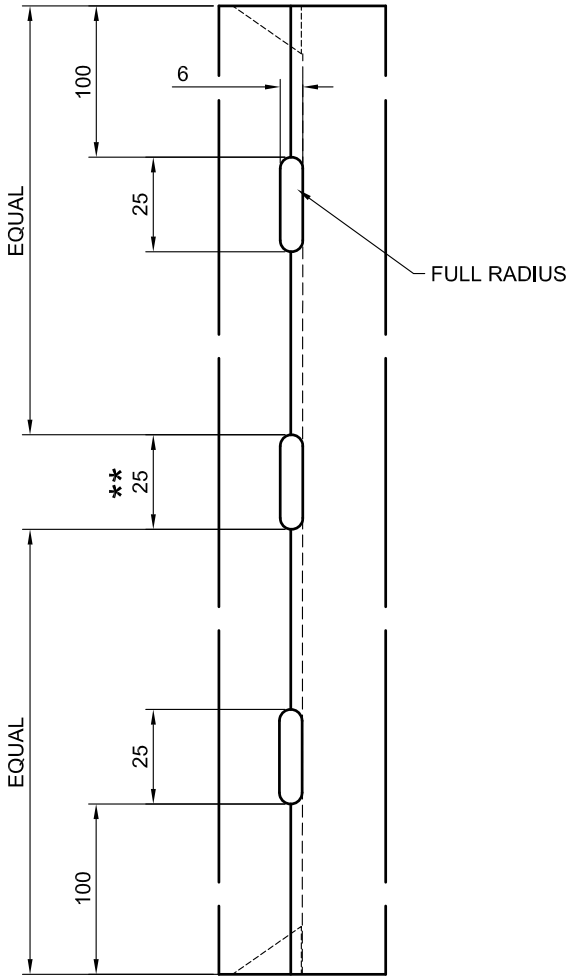

** ADD ADDITIONAL SLOTS
WHERE EACH TRANSOM EXCEEDS
1200mm WIDTH EQUALLY SPACED
AT 500mm MAX. CENTRES

© ALSPEC
ALUMINIUM SPECIALITIES GROUP PTY LTD

TRANSOM SEALING DETAILS

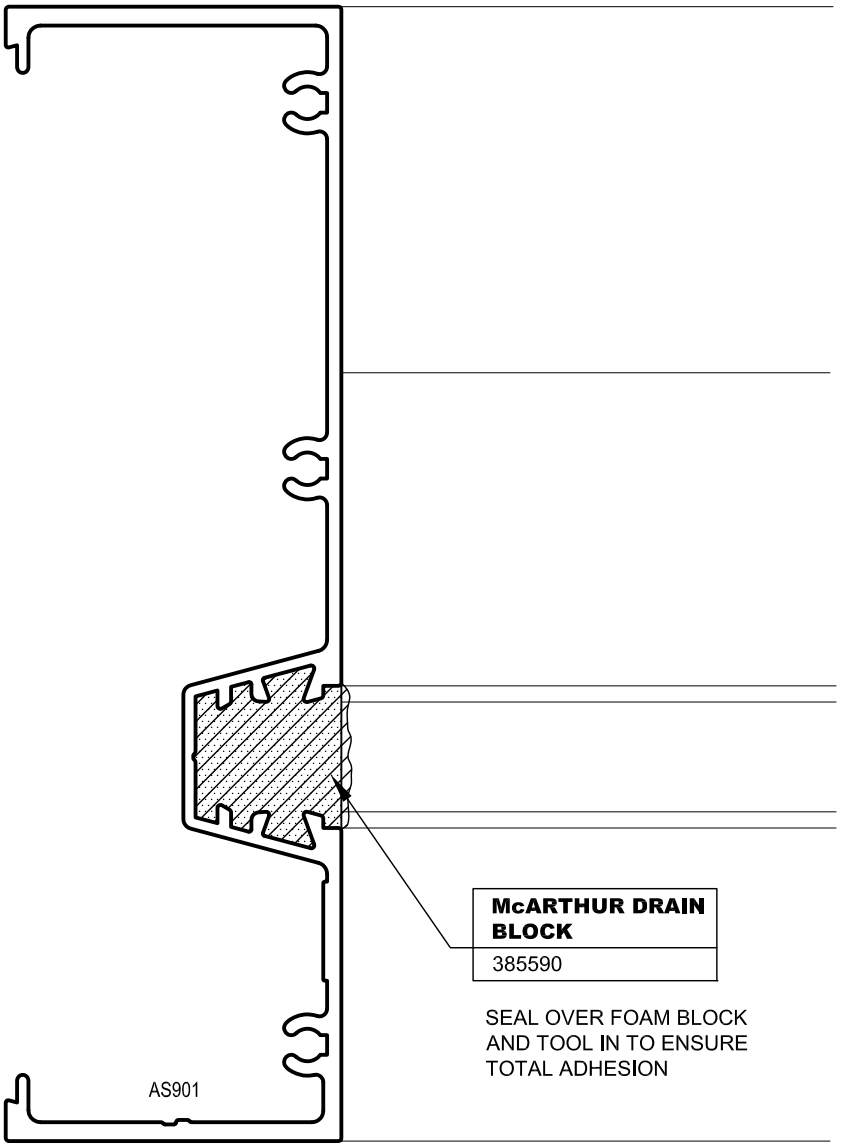

PLAN VIEW AS2C SILL & AS3 BEAD

© ALSPEC
ALUMINIUM SPECIALITIES GROUP PTY LTD

GLAZING DETAILS

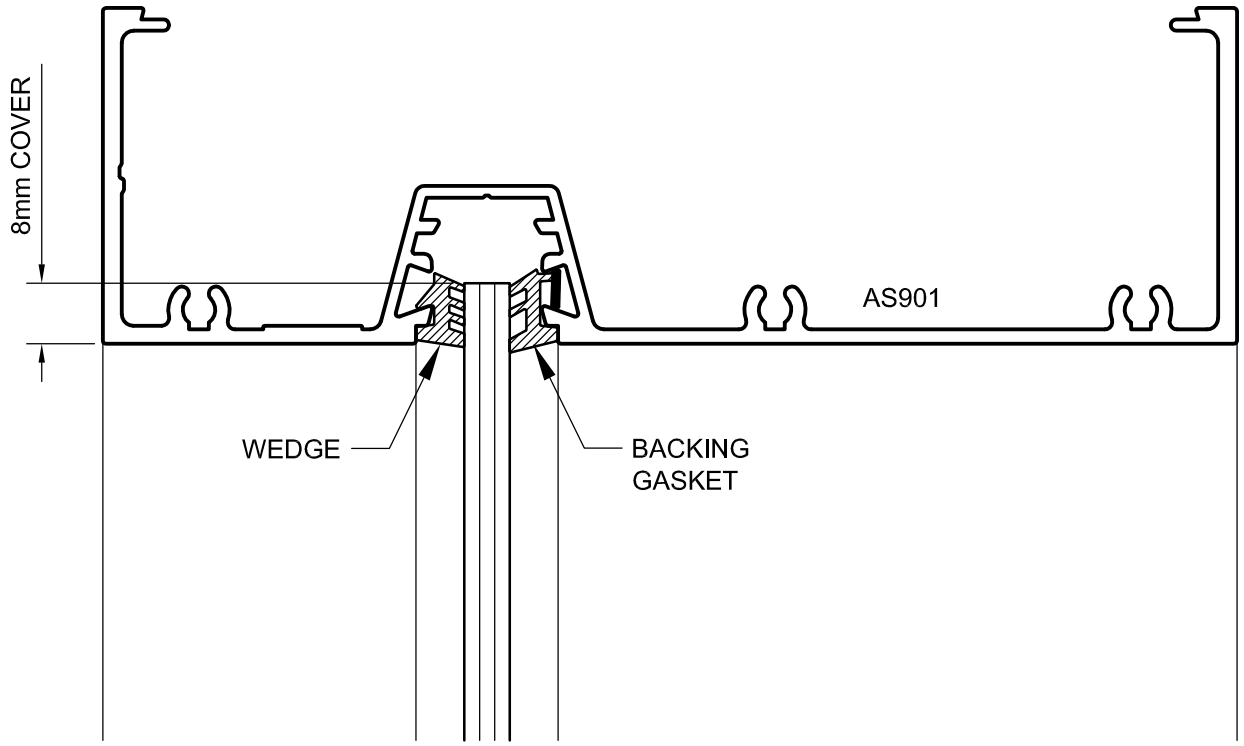

	WEDGE	BACKING GASKET
GLASS THICKNESS	REF. (GAP)	REF. (GAP)
4mm THICK	GR4 (5mm)	GR4 (5mm)
5mm THICK	GR3 (4mm)	GR4 (5mm)
6mm THICK	GR3 (4mm)	CE3 (4mm)
6.38mm THICK	GR3S (4mm)	CE3 (4mm)
8mm THICK	GR3 (4mm)	CE2 (2mm)
8.38mm THICK	GR3 (4mm)	CE2 (2mm)
10mm THICK	GR2 (2mm)	CE2 (2mm)
10.38mm THICK	GR2S (2mm)	CE2 (2mm)

© ALSPEC
ALUMINIUM SPECIALITIES GROUP PTY LTD

McARTHUR 150 OFFSET POCKET FRAMING

Section 4.0
CARE AND MAINTENANCE

PERIMETER FRAMING

Your new ***McArthur 150 Offset Pocket Framing*** has been manufactured using the highest quality materials available to the Architectural industry. Constructed from Architectural grade aluminium, these products are highly corrosion resistant and exceptionally strong. With a moderate amount of maintenance, the ***McArthur 150 Offset Pocket Framing*** will retain it's good looks and resist the elements for years to come.

The ***McArthur 150 Offset Pocket Framing*** is the product of extensive research and development and designed to resist corrosion and rusting, but as with all external elements on the building require some maintenance to keep them looking good and performing well. Depending on how harsh the environment elements are, the maintenance period will vary. Refer to recommended maintenance table below.

Your ***McArthur 150 Offset Pocket Framing*** should only ever need to be washed down with a soft bristled brush using warm water and mild detergent. Rinse well with fresh water and remove any detergent residue. Strong detergents and abrasive cleaners should never be used to clean the ***McArthur 150 Offset Pocket Framing*** as they may scratch or damage the surface finish.

SUGGESTED MAINTENANCE PERIOD TABLE

ENVIRONMENT	RECOMMENDED MAXIMUM MAINTENANCE INTERVAL
Mild	***Six Months***
Moderate	***Three Months***
Tropical/Severe	***One Month***

Environmental Definitions:

Mild – Being rural, away from the coast and remote from industry and urban activity.

Moderate – Being mainly urban, inland and away from heavy industry.

Tropical – Being coastal/marine, subject to salt deposition and within 15km of the Eastern coast or 10km of the Western coast of Australia.

© ALSPEC
ALUMINIUM SPECIALITIES GROUP PTY LTD

Aluminium Specialties Group Pty Ltd

Call 1300 ALSPEC (257732)

SYDNEY

3 Alspec Place
Eastern Creek
NSW 2766
t 02 9834 9500
f 02 9834 9555
sydney@alspec.com.au

BRISBANE

8-22 Jutland Street
Loganlea
QLD 4131
t 07 3089 4900
f 07 3089 4999
brisbane@alspec.com.au

PERTH

30 Holder Way
Malaga
WA 6090
t 08 9209 9100
f 08 9209 9199
perth@alspec.com.au

NEWCASTLE

95 Griffiths Road
Lambton
NSW 2299
t 02 4952 9111
f 02 4952 9728
newcastle@alspec.com.au

TOWNSVILLE

28 Camuglia Street
Garbutt
QLD 4814
t 1300 257 732
f 1300 131 747
townsville@alspec.com.au

ADELAIDE

106-108 Ashley Street
Torrensville
SA 5031
t 08 8150 6960
f 08 8354 2277
adelaide@alspec.com.au

MELBOURNE

26-40 Pound Road West
Dandenong South
VIC 3175
t 03 8787 6333
f 03 8787 6399
melbourne@alspec.com.au

CAIRNS

Unit 4, 5 Toohey Street
Portsmith
QLD 4814
t 1300 257 732
f 1300 131 747
townsville@alspec.com.au

DARWIN

25 Bishop Street
Winnellie
NT 0821
t 08 8941 7300
f 08 8941 7322
darwin@alspec.com.au

alspec
ALUMINIUM SYSTEMS SPECIALISTS

www.alspec.com.au