ecoFRAMEplus 150mm Centre Pocket DG Framing

Technical Manual

July 2024 | ISSUE J

alspec® EVERYTHING ALUMINIUM & HARDWARE

COPYRIGHT

This Technical manual remains the property of Aluminium Specialties Group Pty Limited and contains privileged information which is the subject of copyright and the manual or any part thereof may not be reproduced, copied or loaned in any form without the written permission of Aluminium Specialties Group Pty Limited.

This manual is to be returned to Aluminium Specialties Group Pty Limited when requested.

DISCLAIMER

Whilst every effort has been made to ensure the technical details contained within this manual are accurate, Aluminium Specialties Group Pty Limited can take no responsibilities for any loss or damage whatsoever arising as a result of any errors contained in this manual.

Also, interpretation of standards or codes within this manual is Aluminium Specialties Group Pty Limited interpretation for such codes. Responsibility for code compliance remains with the user of this manual. In some cases product dimensions may vary or be changed without notice. The user of this manual should not act or rely upon on any information contained in this manual without first obtaining appropriate professional advice relating to their particular circumstances.

Aluminium Specialties Group Pty Limited disclaims all liability for loss or damage suffered by any party who acts or fails to act in reliance of this manual.

ecoFRAMEplus®
Centre Pocket Double Glazed Framing

Contents

1. TECHNICAL MANUAL RELEASE NOTES **1.1**

2. TECHNICAL SPECIFICATIONS **2.1**

3. LOADING TABLES **3.1**

Loading Table Guide 3.1
ECO261 + ECO264 Mullion Combination 3.2
ECO272 + ECO273 Mullion Combination 3.3
ECO274 + ECO275 Mullion Combination 3.4
ECO262, 264, 263 Transom 3.5

4. TEST SUMMARY **4.1**

AS2047 - Fixed/ Fixed 4.1
AS2047 - Fixed/ Fixed/Fixed Fixed 4.2

5. EXTRUSIONS **5.1**

6. HARDWARE & COMPONENTS **6.1**

Glazing Wedges 6.1
Backing Gaskets 6.2
Seals 6.2
Fasteners 6.2
Frame Joint Gaskets 6.2
Accessories 6.3
Silicone 6.4
Silicone Product Codes 6.5

7. TYPICAL ELEVATION **7.1**

8. TYPICAL DETAILS **8.1**

Typical Head and Sill Details 8.1
Typical Door Head / Transom Detail 8.2
Transom Details 8.3
Typical Jamb and Mullion Details 8.4
Typical Door Jamb Detail 8.5

10. MANUFACTURING DETAILS **10.1**

Frame Preparation - Jamb 10.1
Frame Preparation - Glazing Adaptor 10.2
Frame Preparation - Deep Pocket Mullions 10.3
Frame Preparation - Shallow Pocket Mullions 10.4
Transom Drainage 10.5

11. ASSEMBLY DETAILS **11.1**

Transom Assembly and Sealing Details 11.1
Glazing Details - Captive 12.1

Glazing Details - with ECO240 & ECO241 Glazing Adaptors 12.2
Glazing Details - With ECO210 Glazing Adaptor 12.3

13. CARE & MAINTENANCE 13.1

1. Technical Manual Release Notes

This page is intended to record all changes to the **ecoFRAMEplus 150mm CENTRE POCKET DOUBLE GLAZED FRAMING** technical manual pages.

Changes or additions to this manual will be itemised with a brief description and date when the amendments were made.

ISSUE	DATE	Amendment Description	Refer to Tech Memo #
A	02/2008	Technical manual initial release	
B	08/2008	SYN-21 re-numbered, Santoprene glazing wedges added	
C	08/2008	Loading table explanation page added, Full manual revised-section numbers changed	
D	02/2009	Revised test results & accessories pages	
E	02/2009	Extrusion pages updated, Contact page updated	
F	02/2020	Technical Manual Update & Re-release	360
G	07/2020	ECO270 Transom removed	393
H	02/2021	ECO211 removed and replaced with ECO240 & ECO241	429
I	04/2024	Added OT24-214 Test Summary to page 4.2	584
J	07/2024	Added OT24-213 Test Summary to page 4.3	586

ALUMINIUM
Aluminium frames should be manufactred using Alspec's **ecoFRAMEplus 150mm CENTRE POCKET DOUBLE GLAZED FRAMING** system.

Refer to wind load tables for maximum panel heights and widths.

GLAZING
- Minimum glass thickness is 4mm.
- Maximum glass thickness is 28mm.
- Glazing components shall be as per Alspec Technical Manual. Refer to page 12.1 to 12.3 for glazing details.

HARDWARE
The hardware shall be Alspec's specific backing gaskets and colour coded wedges for **ecoFRAMEplus 150mm CENTRE POCKET DOUBLE GLAZED FRAMING** system**.**
- All other hardware as per Alspec Technical Manual

FINISHED
- All powder coated material shall be produced to AS3715
- All anodised material shall be produced to AS1231

TESTING
Product shall have a test report to show compliance to AS2047.

All products are available from Alspec (A.B.N. 63 001 252 259) as detailed in the "Alspec" catalogue or on the Internet at www.alspec.com.au. All such framing is to be constructed, assembled and fixed to meet the requirement of AS2047 (windows in buildings), AS1170 (loading code). All glass, glazing rubbers, seals and gaskets shall be applied in accordance with the requirements of AS1288 (glass in buildings - selection and installation).

Fabricators of the ecoFRAMEplus 150mm CENTRE POCKET DOUBLE GLAZED FRAMING system should seek certification by a consultant structural engineer as to the framing being acceptable for the design wind pressure and deflection characteristics required of the site.

Loading Table Guide

The following pages contain wind pressure tables that may be used as a guide to the suitability of Alspec Aluminium Systems framing for various wind loads and frame sizes.

In most situations the Design Wind Pressure for a particular building should be available from the building designer or engineer.

Framing must be checked for suitability.

For a door frame, which is 2400mm high and 1000mm wide, refer to the table below;
Step 1: Locate the height
Step 2: Locate the width
Step 3: Determine the Maximum wind pressure based on the height and width.

SECTION PART NO.	Panel Height	Maximum Design Pressure (Pa)					
	2850	S	1040	840	720	630	570
		U	2410	1960	1660	1460	1310
	2700	S	1230	1000	850	750	680
		U	2700	2190	1870	1640	1480
	2550	S	1460	1200	1020	910	830
		U	3040	2470	2210	1860	1690
STEP 1	2400	S	1770	1450	1250	[illegible]	1010
		U	3440	2810	2410	[illegible]	1940
	2250	S	2160	1780	1530	1370	1270
		U	3940	3230	2780	2470	2270
	2100	S	2670	2210	1920	1730	1610
		U	4550	3750	3240	2900	2680
Ixx = xxx x xxx mm4	Panel Width		800	1000	1200	1400	1600

STEP 3

STEP 2

3. Loading Tables

ecoFRAMEplus
Centre Pocket Double Glazed Framing

ECO261 + ECO264 Mullion Combination

Max Stress = 110Mpa S = Serviceability limit state l/250 U = Ultimate limit state

ECO261 + ECO264 MULLION COMBINATION	Panel Height		Maximum Design Pressure (Pa)						
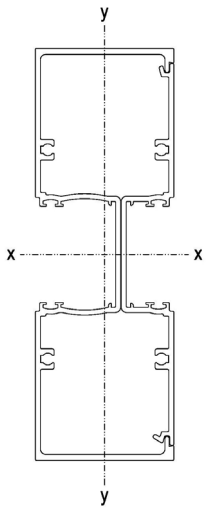	4500	S	730						
		U	1830						
	4200	S	900	730	610				
		U	2100	1690	1420				
	3900	S	1130	910	770	670	590	540	
		U	2450	1970	1660	1440	1280	1150	
	3600	S	1450	1170	990	860	770	700	640
		U	2880	2320	1960	1700	1510	1370	1260
	3300	S	1890	1530	1290	1130	1010	920	860
		U	3440	2780	2350	2050	1830	1660	1530
	3000	S	2530	2050	1740	1530	1380	1260	1180
		U	4180	3390	2870	2510	2250	2060	1910
	2700	S	3000	2850	2430	2150	1950	1800	1700
		U	5190	4220	3590	3160	2850	2630	2460
	2400	S	3000	3000	3000	3000	2890	2710	2590
		U	6620	5410	4640	4110	3740	3490	3320
	2100	S	3000	3000	3000	3000	3000	3000	3000
		U	8750	7210	6230	5590	5160	4900	4770
Ixx = 2506 x 10^3 mm^4	**Mullion Width**		**800**	**1000**	**1200**	**1400**	**1600**	**1800**	**2000**

Tables are based on theoretical section properties

ecoFRAMEplus
Centre Pocket Double Glazed Framing

ECO272 + ECO273 Mullion Combination

Max Stress = 110Mpa S = Serviceability limit state l/250 U = Ultimate limit state

ECO272 + ECO273 MULLION COMBINATION	Panel Height		Maximum Design Pressure (Pa)						
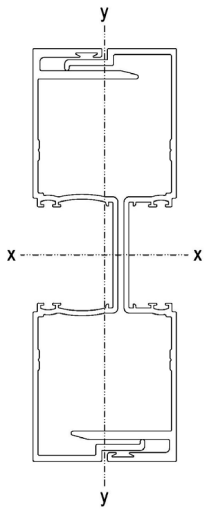	5100	S	730	590					
		U	1890	1520					
	4800	S	880	710	590				
		U	2140	1720	1440				
	4500	S	1070	860	720	630	550		
		U	2440	1960	1650	1420	1260		
	4200	S	1320	1070	900	780	690	620	570
		U	2800	2260	1900	1640	1450	1310	1200
	3900	S	1660	1340	1130	980	870	790	720
		U	3260	2630	2210	1920	1700	1530	1410
	3600	S	2110	1710	1440	1260	1120	1020	940
		U	3840	3100	2610	2270	2020	1830	1680
	3300	S	2760	2230	1890	1650	1480	1350	1250
		U	4580	3700	3130	2730	2430	2210	2040
	3000	S	3000	3000	2550	2240	2010	1850	1720
		U	5570	4510	3830	3350	3000	2740	2550
	2700	S	3000	3000	3000	3000	2840	2630	2480
		U	6910	5620	4790	4210	3800	3500	3280
	2400		3000	3000	3000	3000	3000	3000	3000
			8820	7210	6180	5470	4980	4640	4420
Ixx = 3658 x 10^3 mm^4	**Mullion Width**		**800**	**1000**	**1200**	**1400**	**1600**	**1800**	**2000**

Tables are based on theoretical section properties

ecoFRAMEplus
Centre Pocket Double Glazed Framing

ECO274 + ECO275 Mullion Combination

Max Stress = 110Mpa S = Serviceability limit state l/250 U = Ultimate limit state

ECO274 + ECO275 MULLION COMBINATION	Panel Height		Maximum Design Pressure (Pa)						
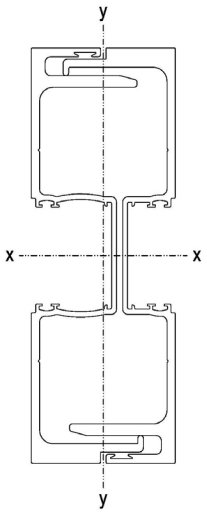	5100	S	1170	940	790	680	600	540	
		U	3300	2650	2220	1920	1690	1520	
	4800	S	1410	1130	950	820	730	650	590
		U	3730	3000	2520	2170	1920	1720	1570
	4500	S	1710	1380	1160	1000	890	800	730
		U	4250	3420	2870	2480	2190	1970	1800
	4200	S	2110	1700	1430	1240	1100	990	910
		U	4890	3940	3310	2860	2540	2280	2090
	3900	S	2640	2130	1800	1560	1390	1260	1160
		U	5680	4580	3850	3340	2970	2680	2450
	3600	S	3000	2730	2300	2010	1790	1630	1500
		U	6690	5400	4550	3950	3520	3190	2930
	3300	S	3000	3000	3000	2640	2360	2150	2000
		U	7980	6460	5460	4760	4240	3860	3560
	3000	S	3000	3000	3000	3000	3000	2950	2750
		U	9000	7870	6670	5830	5230	4780	4440
	2700	S	3000	3000	3000	3000	3000	3000	3000
		U	9000	9000	8340	7340	6620	6100	5720
	2400		3000	3000	3000	3000	3000	3000	3000
			9000	9000	9000	9000	8690	8090	7700
Ixx = 5830 x 10^3 mm^4	**Mullion Width**		**800**	**1000**	**1200**	**1400**	**1600**	**1800**	**2000**

Tables are based on theoretical section properties

3. Loading Tables

ecoFRAMEplus
Centre Pocket Double Glazed Framing

ECO262, 264, 263 Transom

Max Stress = 110Mpa S = Serviceability limit state l/250 U = Ultimate limit state

ECO262, 264, 263 TRANSOM	Transom Centres		Maximum Design Loads (Pa)				
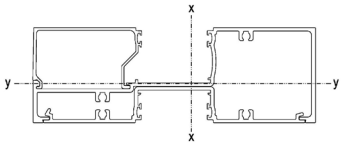	2400	S	3000	3000	3000		
		U	9000	7700	5070		
	2100	S	3000	3000	3000		
		U	9000	8120	5340		
	1800	S	3000	3000	3000	3000	
		U	9000	8550	5620	3640	
	1500	S	3000	3000	3000	3000	
		U	9000	9000	5850	3980	
	1200	S	3000	3000	3000	3000	2980
		U	9000	9000	6600	4630	3450
	900	S	3000	3000	3000	3000	3000
		U	9000	9000	8180	5870	4420
	Max Kg		180	180	140	90	60
Ixx = 2108 x 10^3 mm^4 Iyy = 185 x 10^3 mm^4	**Transom length**		**1200**	**1500**	**1800**	**2100**	**2400**

Tables are based on theoretical section properties

Maximum glass weights have been determined to limit deflection to 5mm, using setting block locations at 1/8 points.

4. Test Summary

AS2047 - Fixed/ Fixed

TEST REPORT:	AS08-020
SYSTEM CONFIGURATION	ecoFRAMEplus 150mm FRAMING F/F
TEST SAMPLE SIZE	2100 H x 2400 W
SERVICEABILITY LOAD	+/- 2500 Pa
ULTIMATE LOAD	+/- 3800 Pa
WATER PENETRATION	1200 Pa
AIR INFILTRATION @ 75Pa	+ 0.04 L/s/ms² - 0.05 L/s/ms²

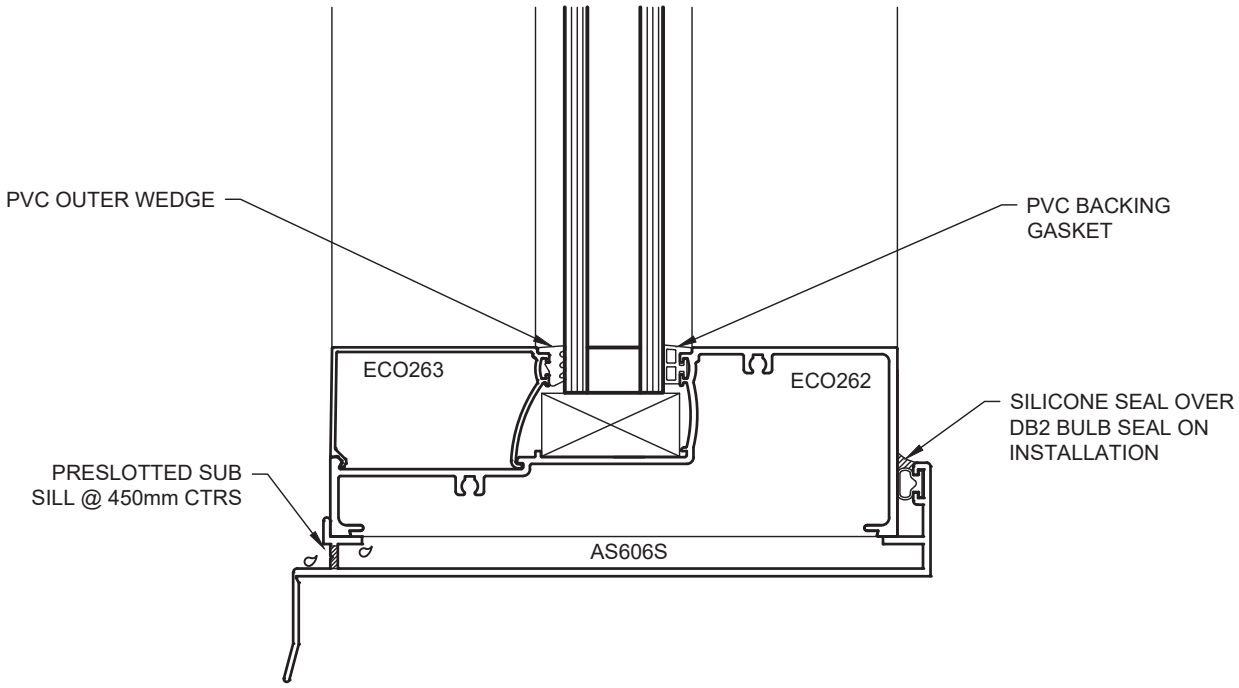

DISCLAIMER:
Please note that the test results shown above reflect specific configurations of a system and are representative only. If a specific high wind load or a different configuration (i.e. changes to frames, transoms, mullions) is required on a project please discuss with Alspec prior to commencement.

4. Test Summary

AS2047 - Fixed/ Fixed/Fixed Fixed

TEST REPORT:	OT24-214
SYSTEM CONFIGURATION	ecoFRAMEplus 150mm FRAMING F/F/FF I ECO272/ECO273 Mullions, ECO262/ECO264 Transom, AS626S Sub Sill
TEST SAMPLE SIZE	3215 H x 4583 W
SERVICEABILITY LOAD	+/- 1400 Pa
ULTIMATE LOAD	+/- 2503 Pa
WATER PENETRATION	420 Pa
AIR INFILTRATION @ 75Pa	+ 0.03 L/s/ms² - 0.04 L/s/ms²

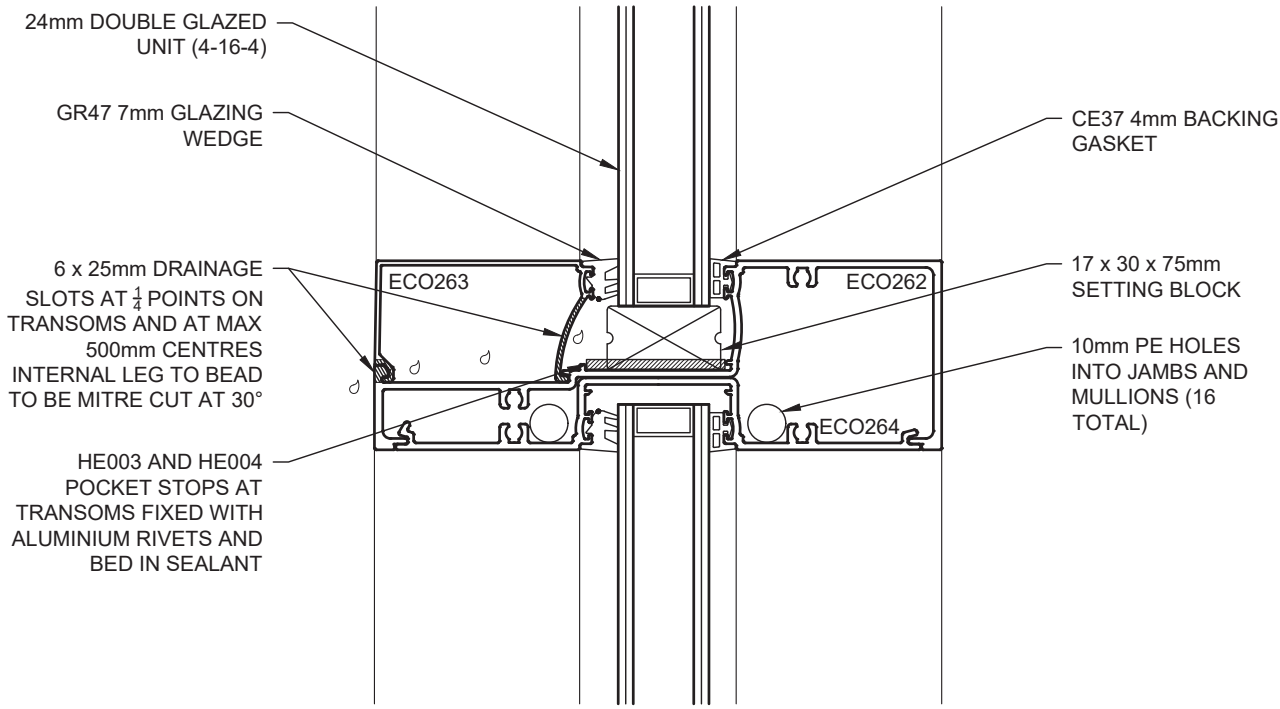

DISCLAIMER:
Please note that the test results shown above reflect specific configurations of a system and are representative only. If a specific high wind load or a different configuration (i.e. changes to frames, transoms, mullions) is required on a project please discuss with Alspec prior to commencement.

4. Test Summary

TEST REPORT:	OT24-213
SYSTEM CONFIGURATION	ecoFRAMEplus 150mm FRAMING F/F/FF I ECO272/ECO273 Mullions, ECO262/ECO264 Transom, AS626S Sub Sill
TEST SAMPLE SIZE	3215 H x 4583 W
SERVICEABILITY LOAD	+/- 2201 Pa
ULTIMATE LOAD	+/- 4002 Pa
WATER PENETRATION	660 Pa
AIR INFILTRATION @ 75Pa	+ 0.03 L/s/ms² - 0.03 L/s/ms²

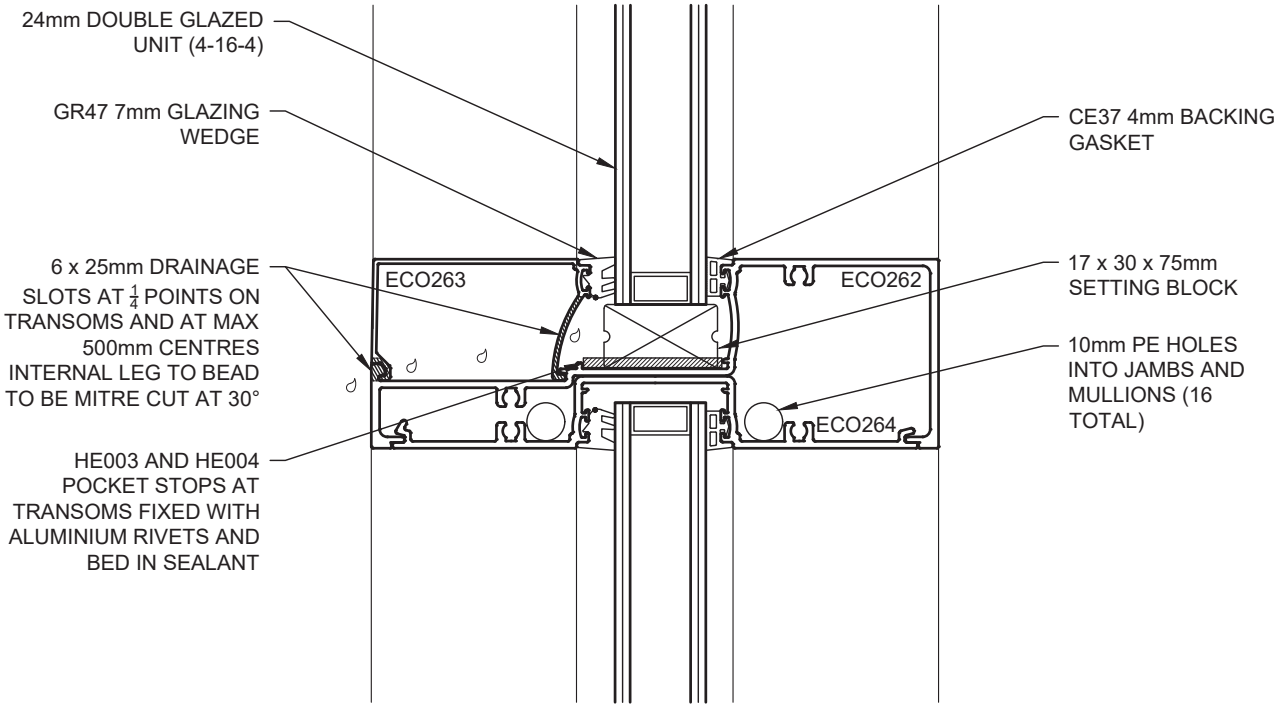

DISCLAIMER:
Please note that the test results shown above reflect specific configurations of a system and are representative only. If a specific high wind load or a different configuration (i.e. changes to frames, transoms, mullions) is required on a project please discuss with Alspec prior to commencement.

5. Extrusions

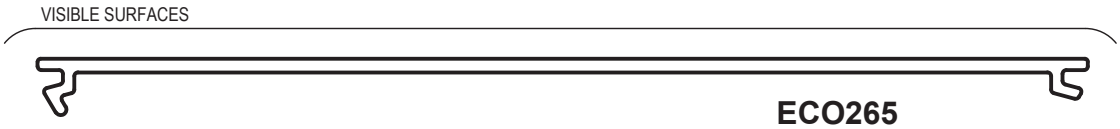

ECO265
FLUSH ADAPTOR

Mass. 0.725 Kg/m
Anod. Per. 304
Paint Per. 139

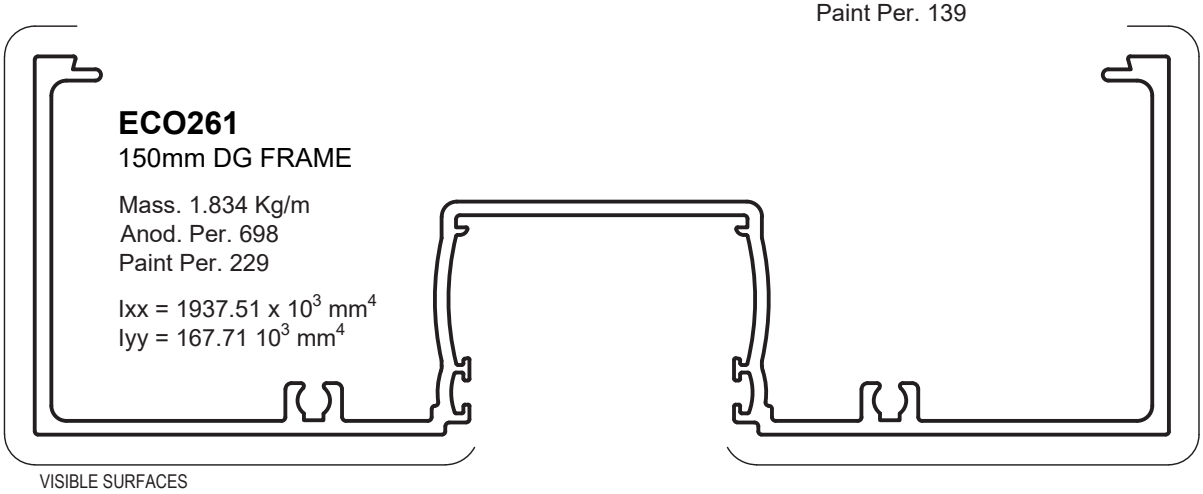

ECO261
150mm DG FRAME

Mass. 1.834 Kg/m
Anod. Per. 698
Paint Per. 229

Ixx = 1937.51 x 10^3 mm^4
Iyy = 167.71 10^3 mm^4

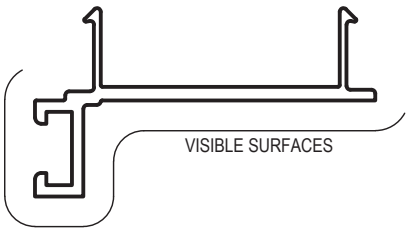

ECO267
150mm DG 45mm
DOOR STOP

Mass. 0.353 Kg/m
Anod. Per. 177
Paint Per. 100

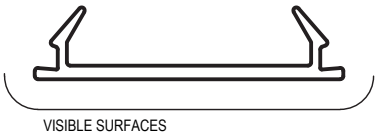

ECO208R
FLUSH POCKET INFILL DG

Mass. 0.253 Kg/m
Anod. Per. 119
Paint Per. 100

5. Extrusions

ecoFRAMEplus
Centre Pocket Double Glazed Framing

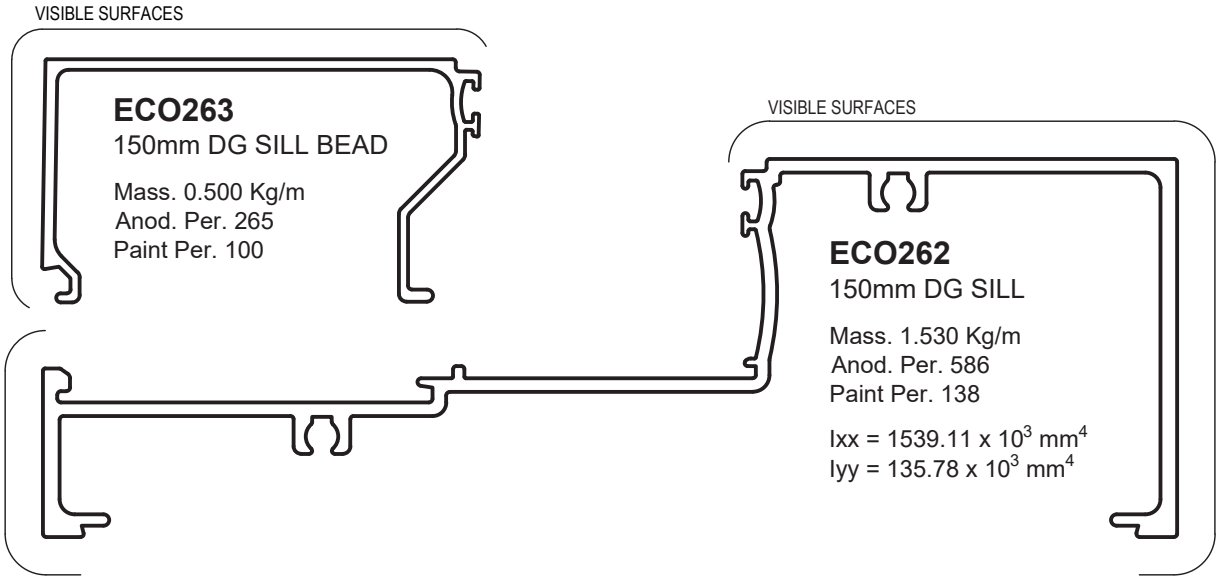

ECO263
150mm DG SILL BEAD

Mass. 0.500 Kg/m
Anod. Per. 265
Paint Per. 100

ECO262
150mm DG SILL

Mass. 1.530 Kg/m
Anod. Per. 586
Paint Per. 138

Ixx = 1539.11 x 10^3 mm^4
Iyy = 135.78 x 10^3 mm^4

ECO264
150mm DG POCKET FILLER

Mass. 1.045 Kg/m
Anod. Per. 436
Paint Per. 107

Ixx = 569.01 x 10^3 mm^4
Iyy = 17.84 x 10^3 mm^4

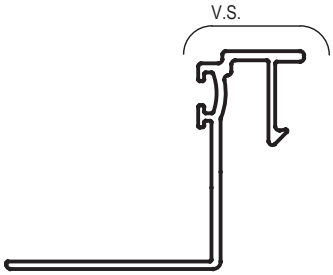

ECO240
DG 24mm GLAZING INFILL DEEP POCKET

Mass. 0.255 Kg/m
Anod. Per. 170
Paint Per. 100

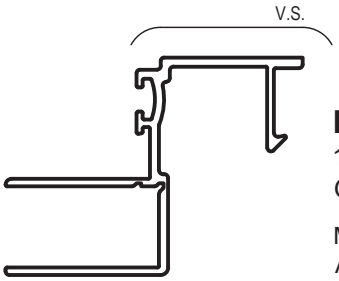

ECO210
150mm DG 16mm GLAZING INFILL

Mass. 0.317 Kg/m
Anod. Per. 214
Paint Per. 100

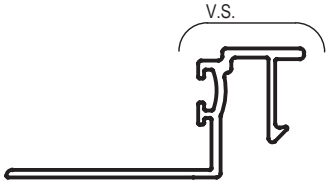

ECO241
DG 24mm GLAZING INFILL SHALLOW POCKET

Mass. 0.217 Kg/m
Anod. Per. 147
Paint Per. 100

5. Extrusions

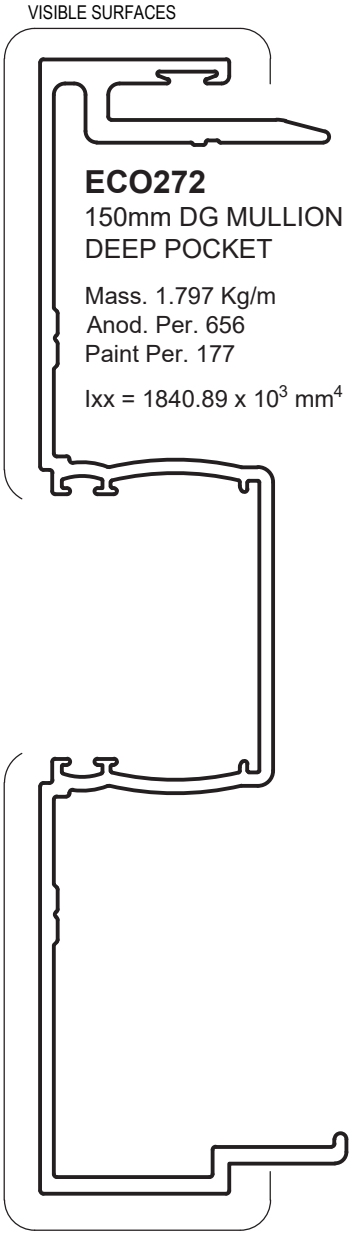

ECO272
150mm DG MULLION
DEEP POCKET

Mass. 1.797 Kg/m
Anod. Per. 656
Paint Per. 177

Ixx = 1840.89 x 10^3 mm^4

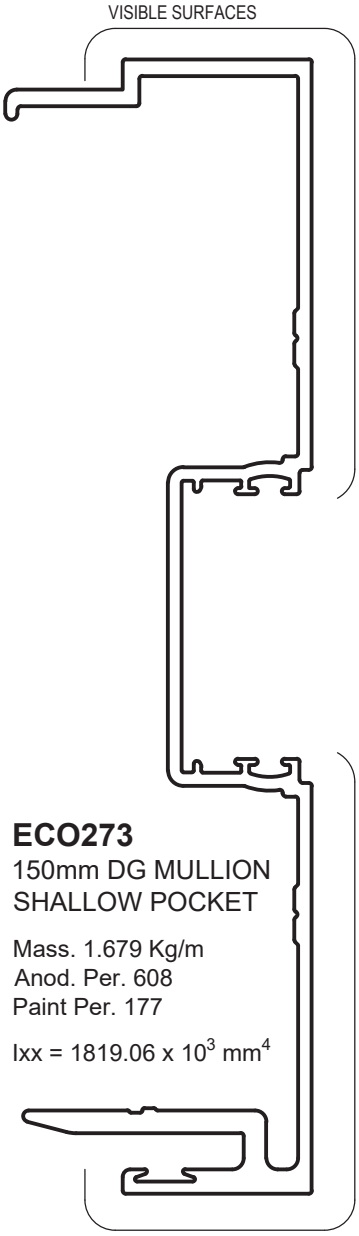

ECO273
150mm DG MULLION
SHALLOW POCKET

Mass. 1.679 Kg/m
Anod. Per. 608
Paint Per. 177

Ixx = 1819.06 x 10^3 mm^4

ECO285
50mm SASH ADAPTOR

Mass. 0.456 Kg/m
Anod. Per. 202
Paint Per. 103

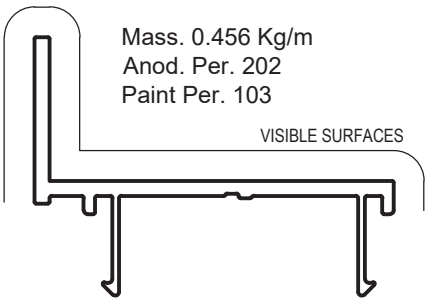

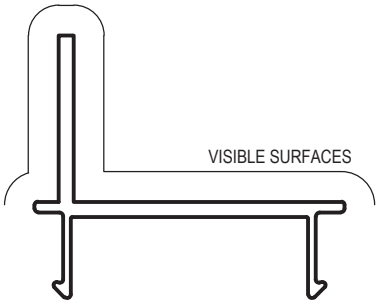

ECO223
35mm SASH
ADAPTOR
(INSET AWNINGS)

Mass. 0.395 Kg/m
Anod. Per. 174
Paint Per. 100

5. Extrusions

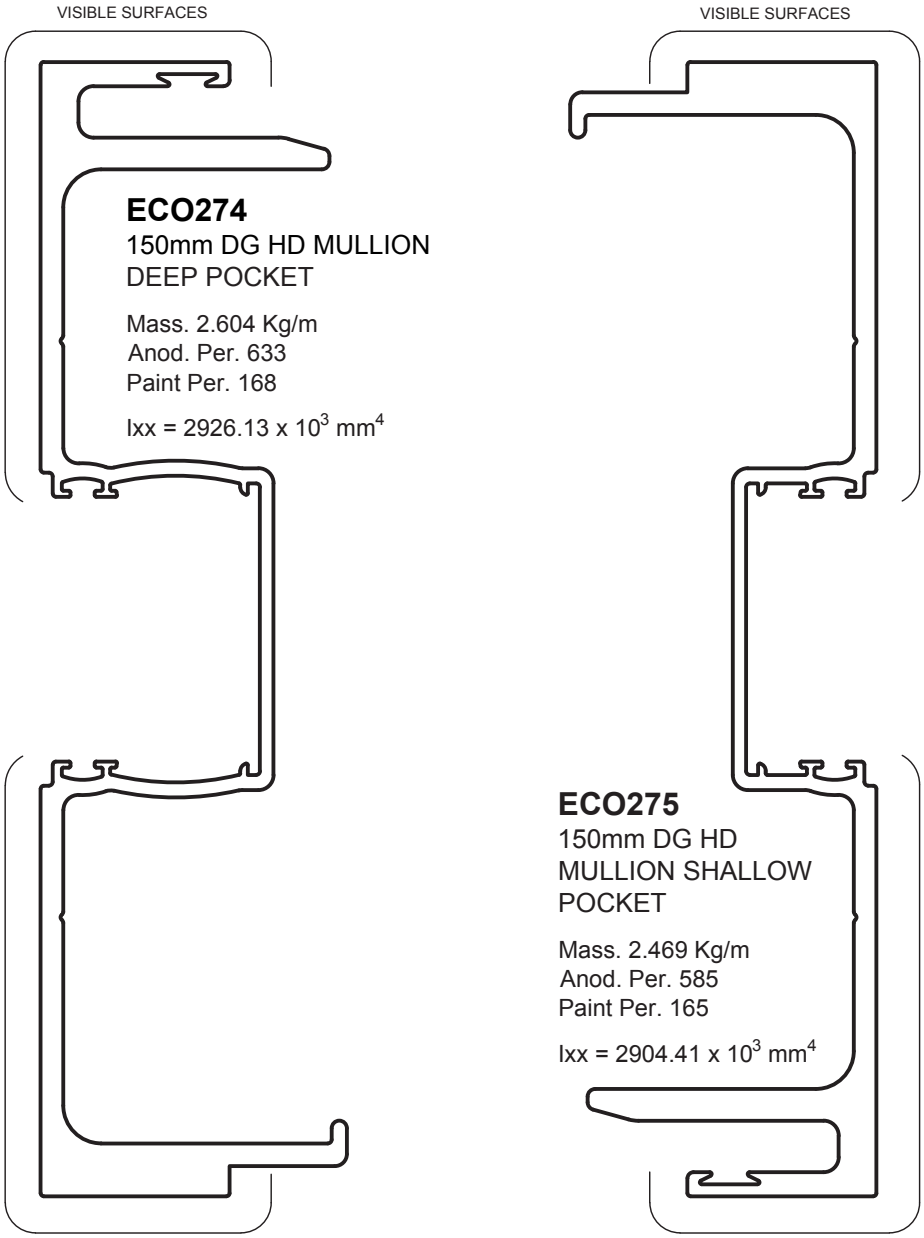

Glazing Wedges

IMAGE	TO SUIT GAP	MATERIAL	PART #	DESCRIPTION
	3mm	PVC	1313055	GR43 GLAZING WEDGE (BROWN) (3mm GAP) PVC x 200m ROLL
		S/PRENE	1313063	GR43S GLAZING WEDGE (BROWN) (3mm GAP) S/PRENE x 200m ROLL
	4mm	PVC	1313056	GR44 GLAZING WEDGE (WHITE) (4mm GAP) PVC x 200m ROLL
		S/PRENE	1313064	GR44S GLAZING WEDGE (WHITE) (4mm GAP) S/PRENE x 200m ROLL
	5mm	PVC	1313057	GR45 GLAZING WEDGE (BLUE) (5mm GAP) PVC x 150m ROLL
		S/PRENE	1313065	GR45S GLAZING WEDGE (BLUE) (5mm GAP) S/PRENE x 150m ROLL
	6mm	PVC	1313058	GR46 GLAZING WEDGE (YELLOW) (6mm GAP) PVC x 150m ROLL
		S/PRENE	1313066	GR46S GLAZING WEDGE (YELLOW) (6mm GAP) S/PRENE x 150m ROLL
	7mm	PVC	1313059	GR47 GLAZING WEDGE (RED) (7mm GAP) PVC x 150m ROLL
		S/PRENE	1313062	GR47S GLAZING WEDGE (RED) (7mm GAP) S/PRENE x 150m ROLL
	8mm	PVC	1313060	GR48 GLAZING WEDGE (ORANGE) (8mm GAP) PVC x 150m ROLL
		S/PRENE	1313067	GR48S GLAZING WEDGE (ORANGE) (8mm GAP) S/PRENE x 150m ROLL
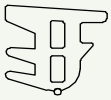	9mm	PVC	1313076	GR50 GLAZING WEDGE (GREEN) (9mm GAP) PVC x 100m ROLL

Backing Gaskets

IMAGE	TO SUIT GAP	MATERIAL	PART #	DESCRIPTION
	2mm	PVC	1313052	GR36 BACKING GASKET - PUSH IN (2mm GAP) PVC x 200m ROLL
		S/PRENE	1313053	GR36S BACKING GASKET - PUSH IN (2mm GAP) S/PRENE x 200m ROLL
	2mm	PVC	1313079	CE36 CO-EXT BACKING GASKET (2mm GAP) PVC x 100m ROLL
		S/PRENE	1313080	CE36S CO-EXT BACKING GASKET (2mm GAP) S/PRENE x 100m ROLL
	4mm	PVC	1313054	GR37 BACKING GASKET - PUSH IN (4mm GAP) PVC x 175m ROLL
		S/PRENE	1313069	GR37S BACKING GASKET - PUSH IN (4mm GAP) S/PRENE x 175m ROLL
	4mm	PVC	1313081	CE37 CO-EXT BACKING GASKET (4mm GAP) PVC x 100m ROLL
		S/PRENE	1313082	CE37S CO-EXT BACKING GASKET (4mm GAP) S/PRENE x 100m ROLL
	6mm	PVC	1313074	GR49 BACKING GASKET - PUSH IN (6mm GAP) PVC x 100m ROLL
		S/PRENE	1313075	GR49S BACKING GASKET - PUSH IN (6mm GAP) S/PRENE x 100m ROLL
	6mm	PVC	1313083	CE49 CO-EXT BACKING GASKET (6mm GAP) PVC x 100m ROLL
		S/PRENE	1313084	CE49S CO-EXT BACKING GASKET (6mm GAP) S/PRENE x 100m ROLL

Seals

IMAGE	PART #	FINISH	DESCRIPTION
	1376402	BLACK (034)	DB1 DOOR STOP RUBBER x 100m
	1376403	GREY (036)	DB1 DOOR STOP RUBBER GREY x 200m
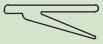	1376452	BLACK (034)	MS1B MULLION RUBBER x 100m

Fasteners

SCREWS			
PART #	HEAD	DESCRIPTION	LOCATION
1382644	SQUARE #2	10g x 1 (25mm) 304SS SQ #2 PAN S/TAP SCREW x 1000	MAIN FRAME
1382054	PHILLIPS #2	10g x 1 (25mm) SS PHIL PAN S/TAP SCREW x 500	FRAME

Frame Joint Gaskets

PART #	DESCRIPTION	FINISH
1385509	FJG50 FRAME JOINT GASKET PVC FOAM TAPE 50 x 1.6mm 45.7m	BLACK (034)
		GREY (036)

Accessories

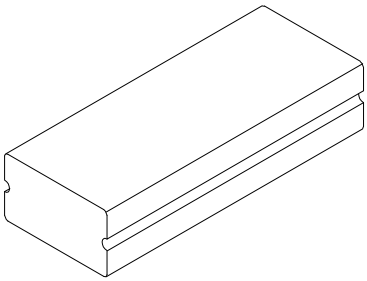

SETTING BLOCK 17 x 30 x 75mm BAG OF 50	
PART	1376734
FINISH	BLACK (034)
QTY	BAG

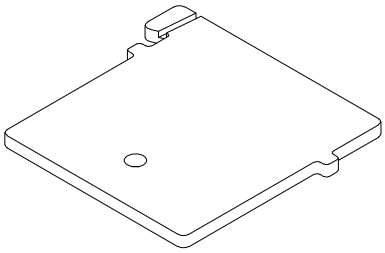

HE004 POCKET STOP x 50 FOR ECO204, 213 & 215	
PART	1378197
FINISH	NOT SPECIFIED (099)
QTY	BAG

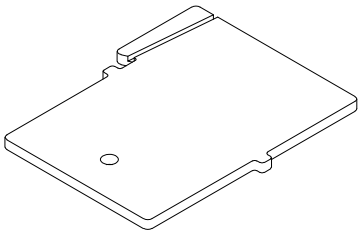

HE003 POCKET STOP x 50 FOR ECO201, 212 & 214	
PART	1378196
FINISH	NOT SPECIFIED (099)
QTY	BAG

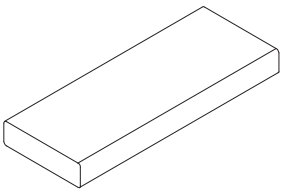

SETTING BLOCK 8 x 29 x 75mm BAG OF 50	
PART	1376771
FINISH	BLACK (034)
QTY	BAG

Silicone

100% NEUTRAL CURE SILICONE

- Premium 100% silicone
- UV Stable
- Superior adhesion
- Flexible + 25%
- AS4020 Approved

100% MATTE NEUTRAL CURE SILIICONE

- Premium 100% silicone
- Matte finish
- UV Stable
- Outstanding elongation
- Higher strength

41 CLADDING SILICONE

- Premium 100% silicone
- UV Stable
- Superior adhesion
- Movement capability + 50%

WET AREA SILICONE

- Premium 100% silicone
- Mould inhibited
- Movement capability + 25%
- UV Stable
- Non corrosive
- Superior adhesion

HYBRID PU ADHESIVE SEALANT

- No isocyanates
- Internal/External
- No shrinking/staining
- Paintable
- Excellent adhesion

20 ACETIC CURE SILICONE

- Premium 100% silicone
- UV Stable
- Superior adhesion
- Flexible + 25%

D60 SILICONE

- Premium 100% silicone
- UV Stable
- 2-5 minute skin time
- Flexible + 25%
- No slump

*For more information on silicones, please refer to Alspec Silicone Brochure.

ecoFRAMEplus
Centre Pocket Double Glazed Framing

Silicone Product Codes

Product Category	Item No.	Alspec Part No. Code	Description	Finish	Pack
ALSPEC 100%	1	1386113	ALSPEC 100% NEUTRAL CURE SILICONE x 310g CAT	ALMOND IVORY	CARTRIDGE
	2	1386114	ALSPEC 100% NEUTRAL CURE SILICONE x 310g CAT	ALUMINIUM	CARTRIDGE
	3	1386105	ALSPEC 100% NEUTRAL CURE SILICONE x 310g CAT	BLACK	CARTRIDGE
	4	1386140	ALSPEC 100% NEUTRAL CURE SILICONE x 310g CAT	CAULFIELD GREEN	CARTRIDGE
	5	1386111	ALSPEC 100% NEUTRAL CURE SILICONE x 310g CAT	CLASSIC CREAM	CARTRIDGE
	6	1386108	ALSPEC 100% NEUTRAL CURE SILICONE x 310g CAT	GREY	CARTRIDGE
	7	1386138	ALSPEC 100% NEUTRAL CURE SILICONE x 310g CAT	MONUMENT	CARTRIDGE
	8	1386112	ALSPEC 100% NEUTRAL CURE SILICONE x 310g CAT	OFF WHITE	CARTRIDGE
	9	1386141	ALSPEC 100% NEUTRAL CURE SILICONE x 310g CAT	STONE BEIGE	CARTRIDGE
	10	1386101	ALSPEC 100% NEUTRAL CURE SILICONE x 310g CAT	TRANSLUCENT	CARTRIDGE
	11	1386106	ALSPEC 100% NEUTRAL CURE SILICONE x 310g CAT	WHITE	CARTRIDGE
	12	1386143	ALSPEC 100% NEUTRAL CURE SILICONE x 310g CAT	WOODLAND GREY	CARTRIDGE
ALSPEC 100% MATT	13	1386103	ALSPEC 100% NEUTRAL CURE SILICONE x 420g CAT	BLACK MATT	CARTRIDGE
	14	1386107	ALSPEC 100% NEUTRAL CURE SILICONE x 420g CAT	GREY MATT	CARTRIDGE
	15	1386144	ALSPEC 100% NEUTRAL CURE SILICONE x 420g CAT	WHITE MATT	CARTRIDGE
ALSPEC 20	16	1386115	ALSPEC 20 SILICONE x 310g CAT	TRANSLUCENT	CARTRIDGE
ALSPEC 41 CLADDING	17	1386159	ALSPEC 41 SILICONE x 400g CAT	BLACK MATT	CARTRIDGE
	18	1386117	ALSPEC 41 SILICONE x 600ml SAU	BLACK MATT	SAUSAGE
	19	1386158	ALSPEC 41 SILICONE x 400g CAT	LIGHT GREY MATT	CARTRIDGE
	20	1386118	ALSPEC 41 SILICONE x 600ml SAU	LIGHT GREY MATT	SAUSAGE
	21	1386157	ALSPEC 41 SILICONE x 400g CAT	WHITE MATT	CARTRIDGE
	22	1386145	ALSPEC 41 SILICONE x 600ml SAU	WHITE MATT	SAUSAGE
ALSPEC D60	23	1386121	ALSPEC D60 SILICONE x 310g CAT	BLACK	CARTRIDGE
	25	1386123	ALSPEC D60 SILICONE x 310g CAT	GREY	CARTRIDGE
	26	1386120	ALSPEC D60 SILICONE x 310g CAT	TRANSLUCENT	CARTRIDGE
	27	1386124	ALSPEC D60 SILICONE x 310g CAT	WHITE	CARTRIDGE
ALSPEC HYBRID PU	28	1386127	ALSPEC HYBRID PU x 480g CAT	BLACK	CARTRIDGE
	29	1386126	ALSPEC HYBRID PU x 600ml SAU	BLACK	SAUSAGE
	30	1386160	ALSPEC HYBRID PU x 480g CAT	GREY	CARTRIDGE
	31	1386128	ALSPEC HYBRID PU x 600ml SAU	GREY	SAUSAGE
	32	1386130	ALSPEC HYBRID PU x 480g CAT	WHITE	CARTRIDGE
	33	1386129	ALSPEC HYBRID PU x 600ml SAU	WHITE	SAUSAGE
ALSPEC WET AREA	34	1386137	ALSPEC WET AREA SILICONE x 310g CAT	ALMOND IVORY	CARTRIDGE
	35	1386139	ALSPEC WET AREA SILICONE x 310g CAT	BLACK	CARTRIDGE
	36	1386146	ALSPEC WET AREA SILICONE x 310g CAT	BLUESTONE	CARTRIDGE
	37	1386147	ALSPEC WET AREA SILICONE x 310g CAT	CHARCOAL	CARTRIDGE
	38	1386136	ALSPEC WET AREA SILICONE x 310g CAT	LIGHT GREY	CARTRIDGE
	39	1386148	ALSPEC WET AREA SILICONE x 310g CAT	MID GREY	CARTRIDGE
	40	1386149	ALSPEC WET AREA SILICONE x 310g CAT	OFF WHITE	CARTRIDGE
	41	1386150	ALSPEC WET AREA SILICONE x 310g CAT	PEWTER	CARTRIDGE
	42	1386151	ALSPEC WET AREA SILICONE x 310g CAT	STONE BEIGE	CARTRIDGE
	43	1386154	ALSPEC WET AREA SILICONE x 310g CAT	TAUPE	CARTRIDGE
	44	1386152	ALSPEC WET AREA SILICONE x 310g CAT	TILE GREY	CARTRIDGE
	45	1386133	ALSPEC WET AREA SILICONE x 310g CAT	TRANSLUCENT	CARTRIDGE
	46	1386153	ALSPEC WET AREA SILICONE x 310g CAT	TRAVERTINE	CARTRIDGE
	47	1386134	ALSPEC WET AREA SILICONE x 310g CAT	WHITE	CARTRIDGE

7. Typical Elevation

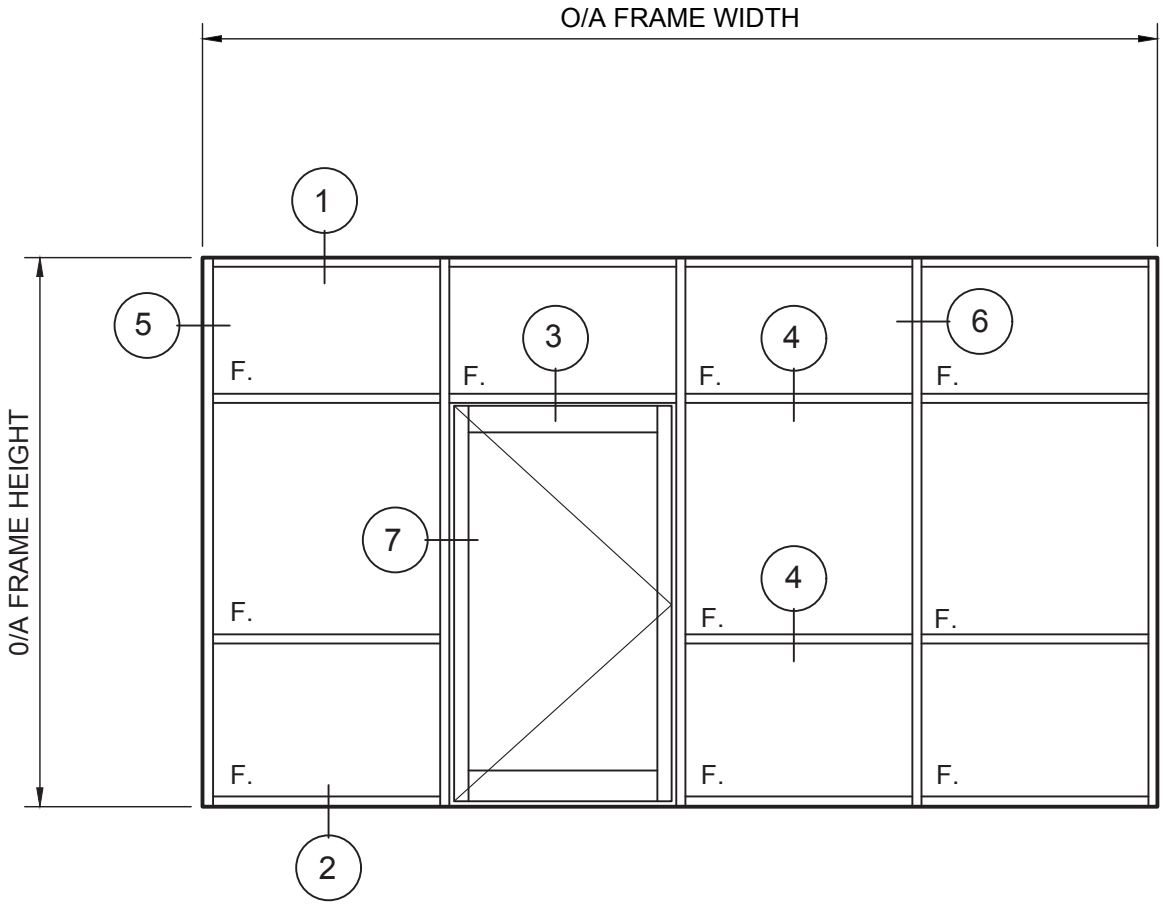

Typical Head and Sill Details

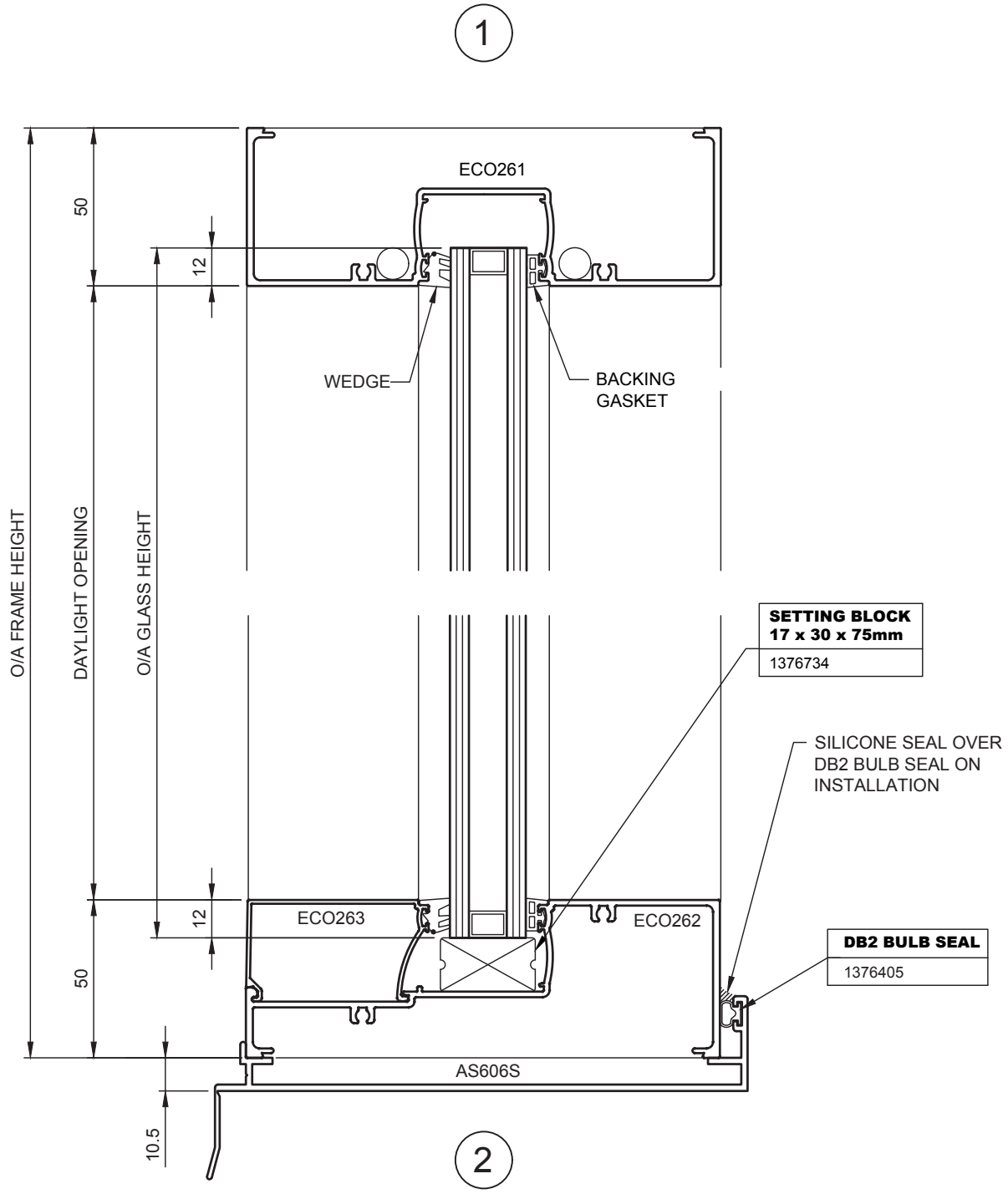

Typical Door Head / Transom Detail

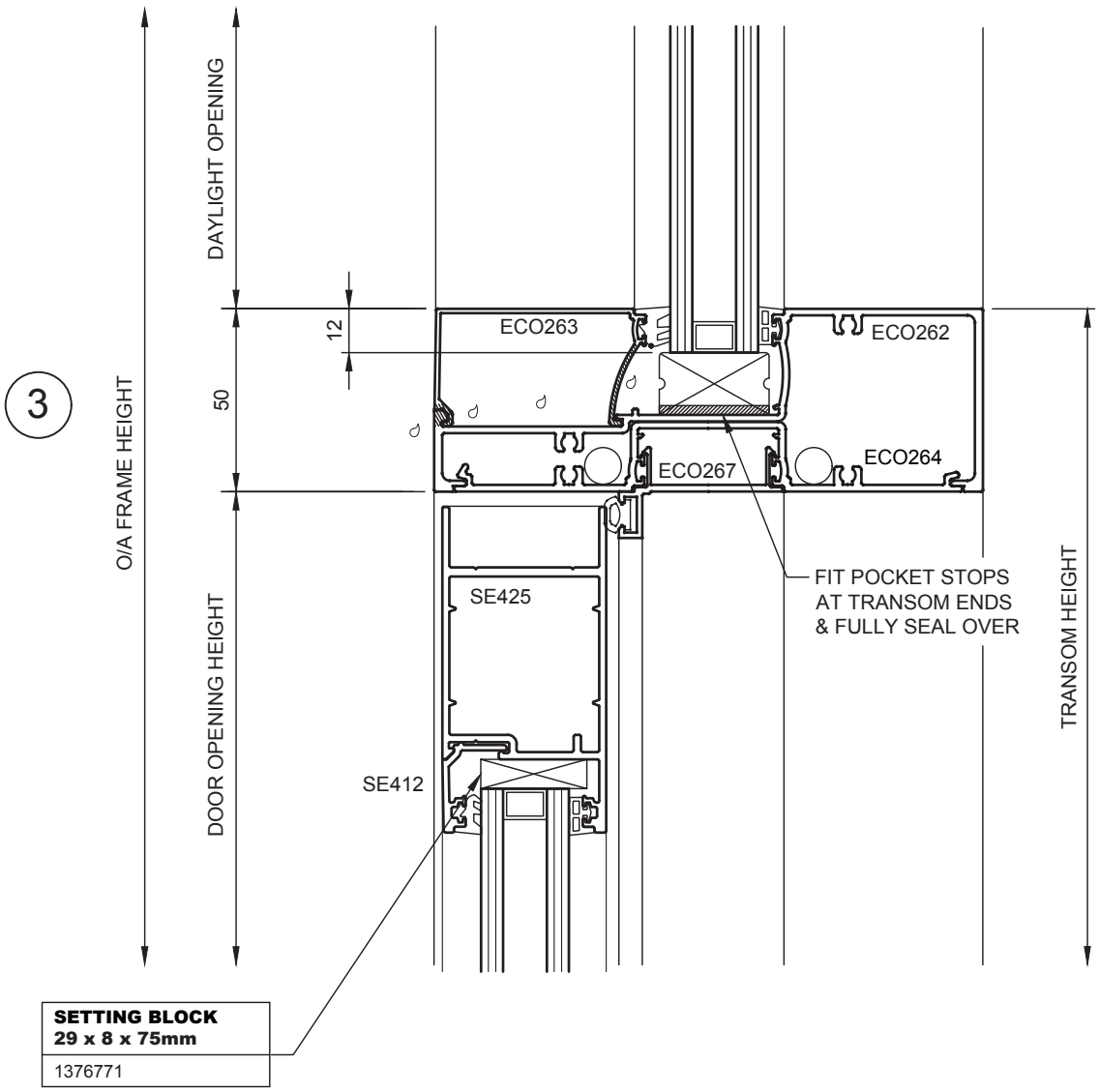

Transom Details

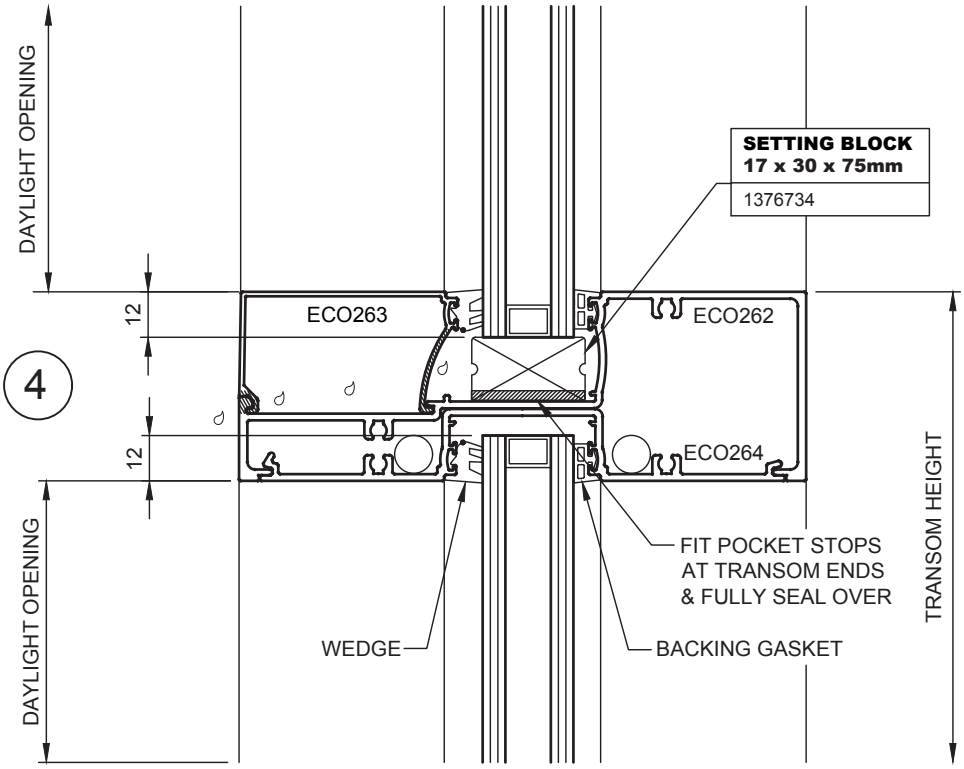

Typical Jamb and Mullion Details

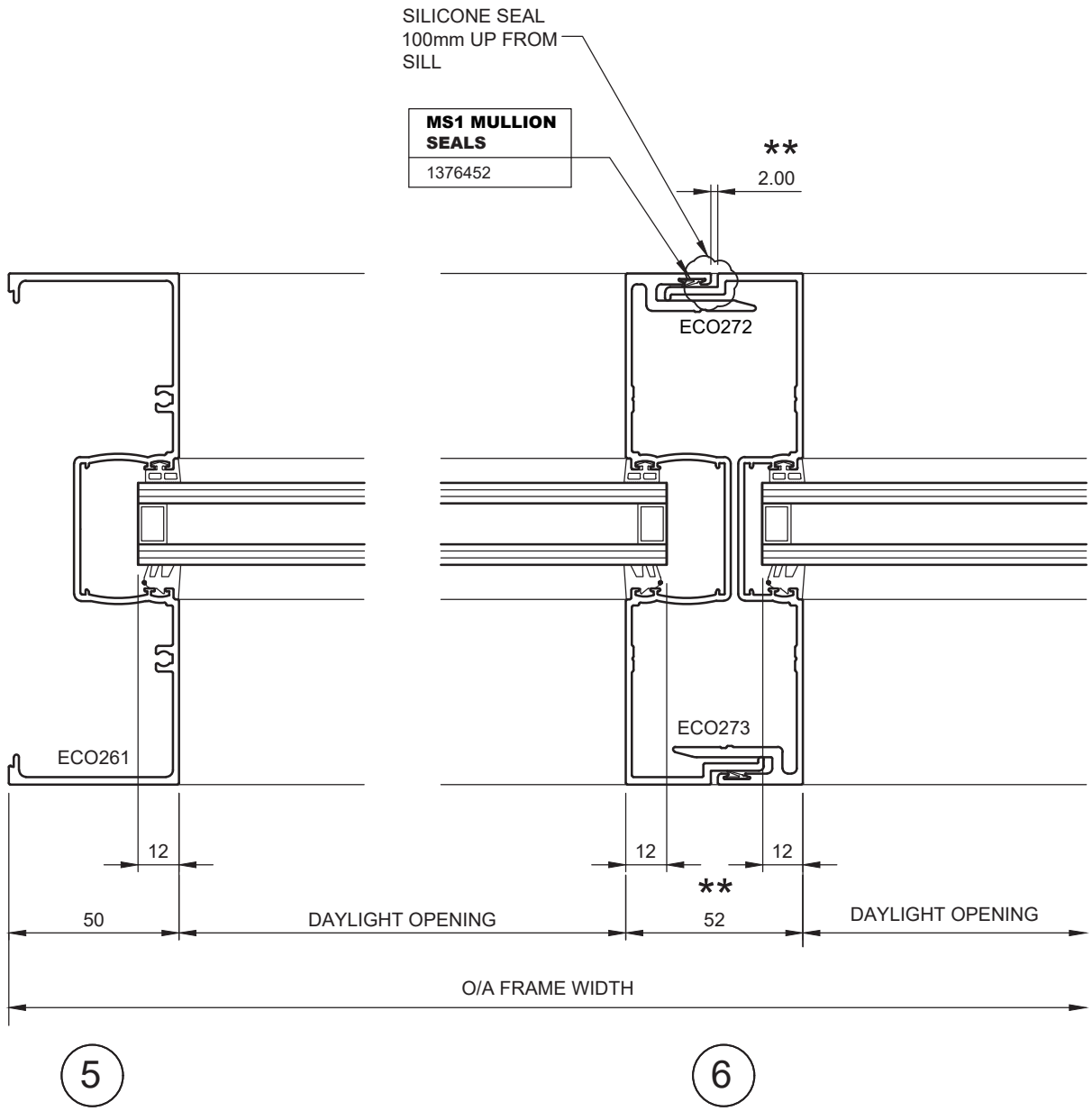

** NOMINAL DIMENSIONS ONLY. MAY VARY DUE TO PROJECT REQUIREMENTS

Typical Door Jamb Detail

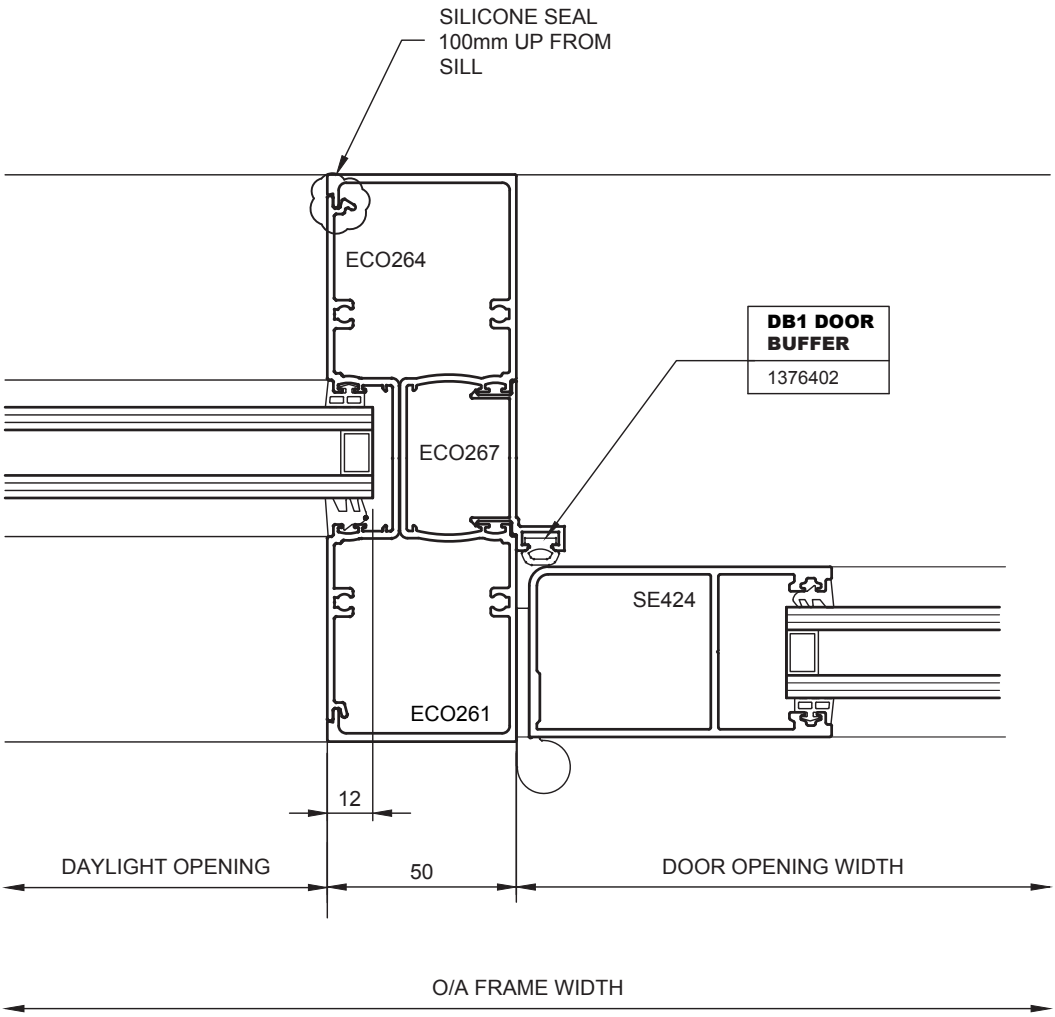

7

10. Manufacturing Details

Frame Preparation - Jamb

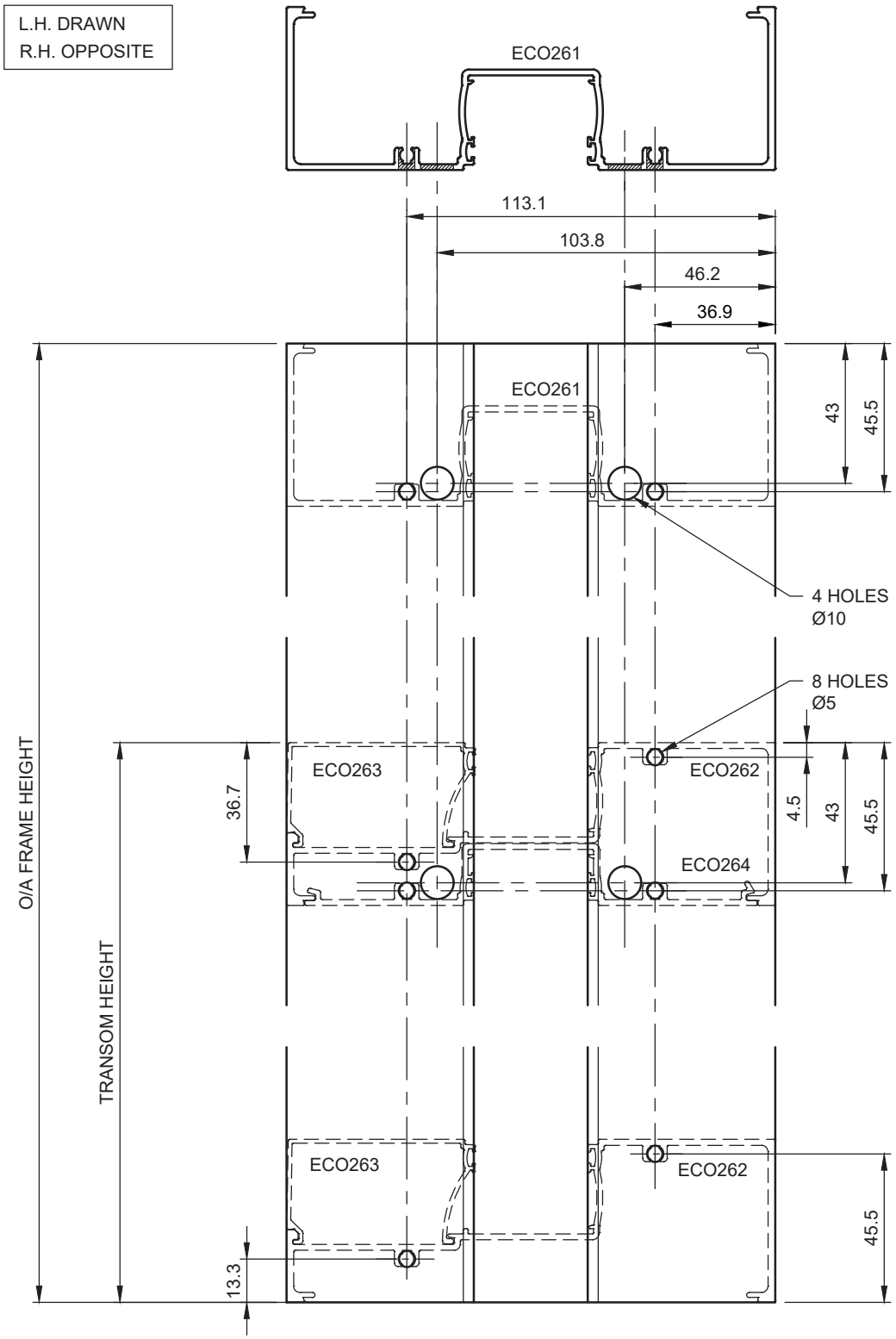

Frame Preparation - Glazing Adaptor

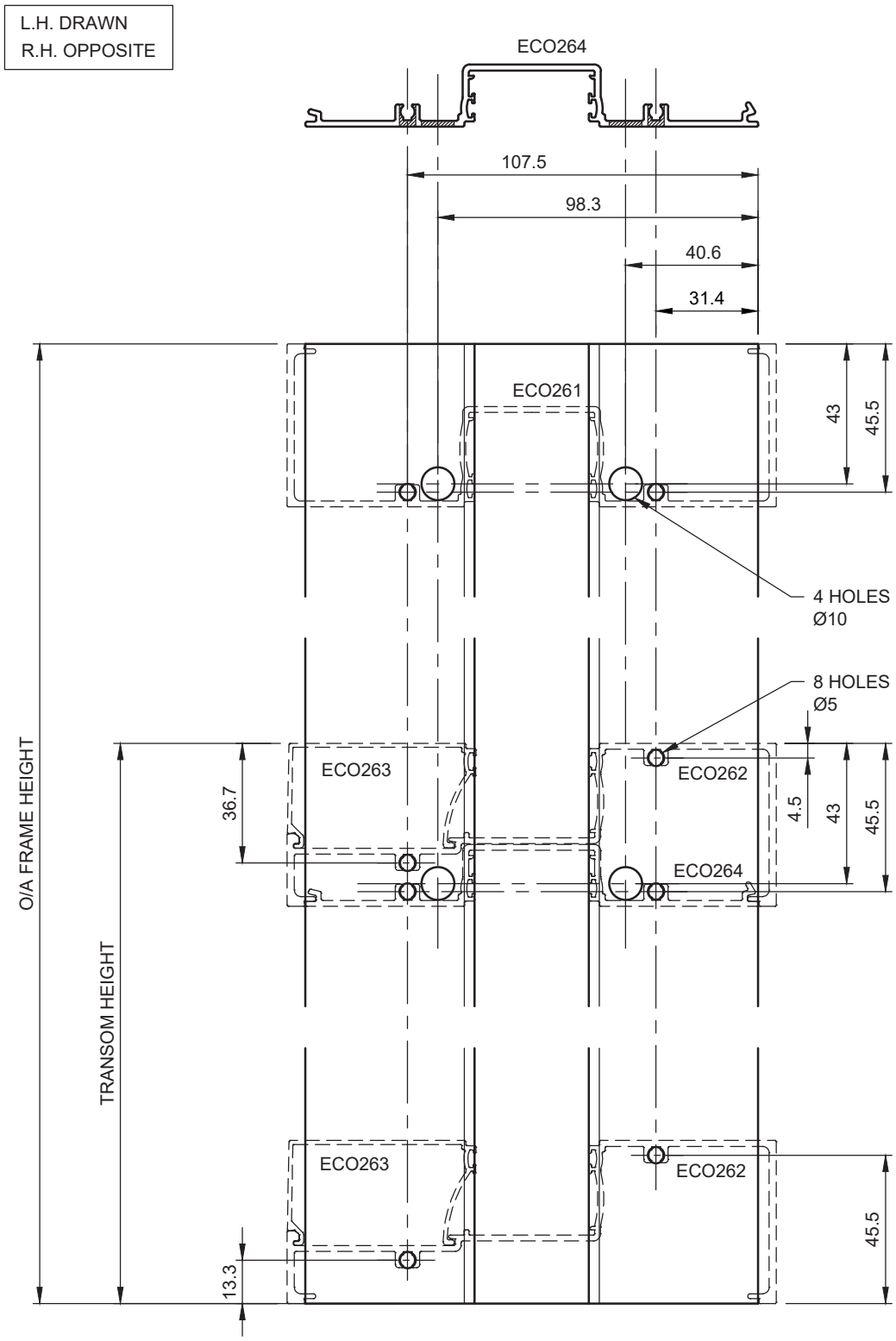

Frame Preparation - Deep Pocket Mullions

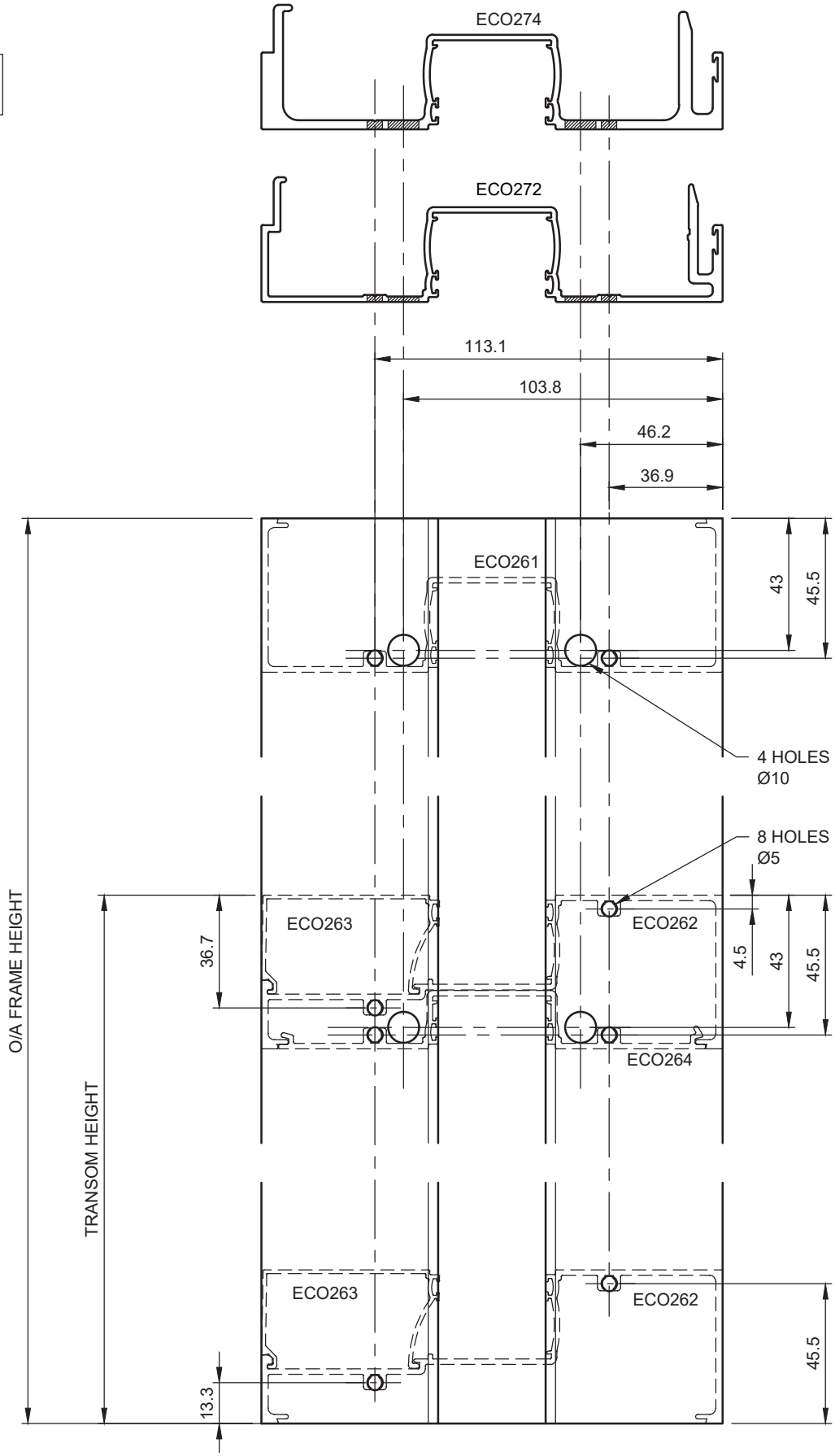

Frame Preparation - Shallow Pocket Mullions

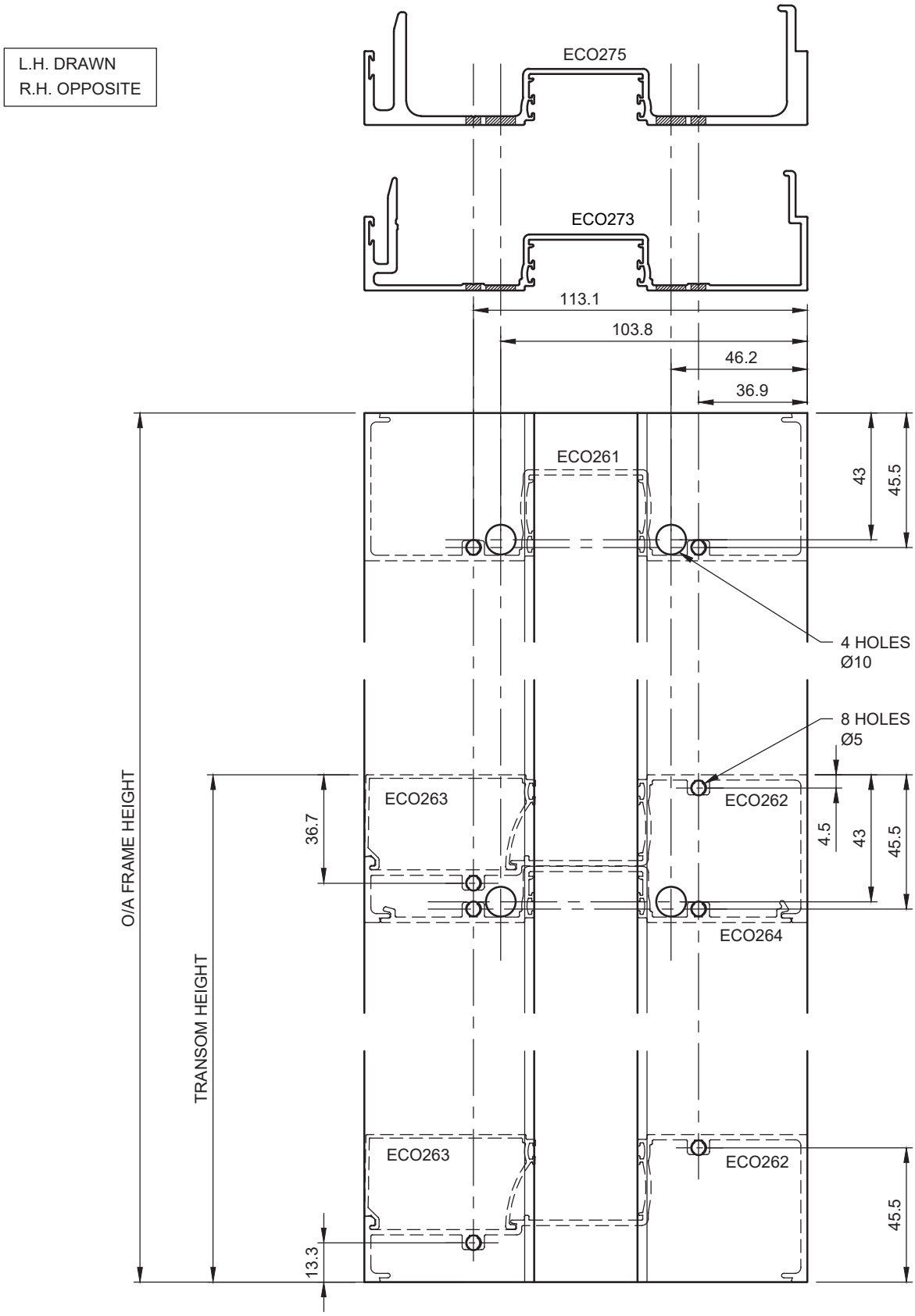

10. Manufacturing Details

Transom Drainage

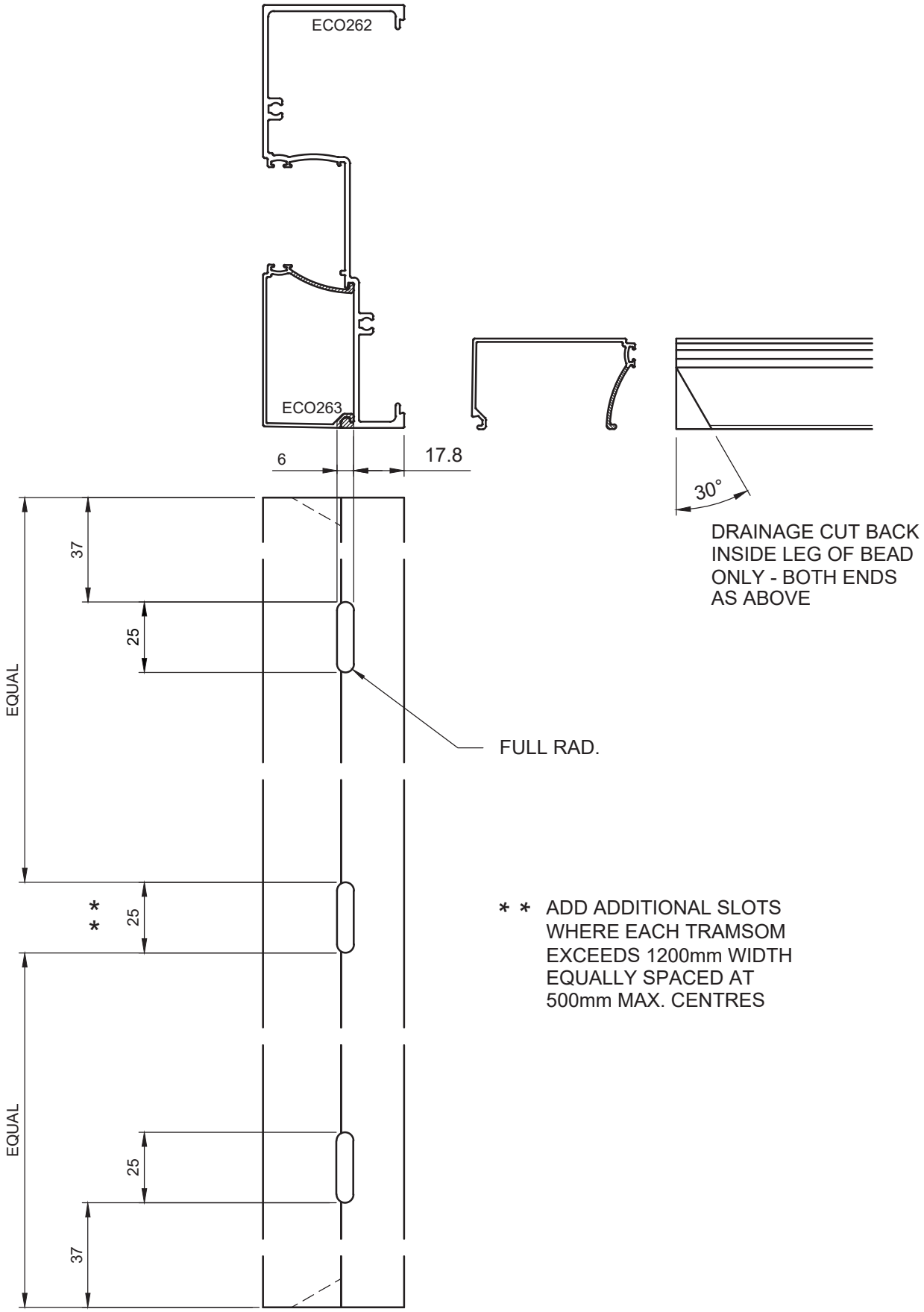

Transom Assembly and Sealing Details

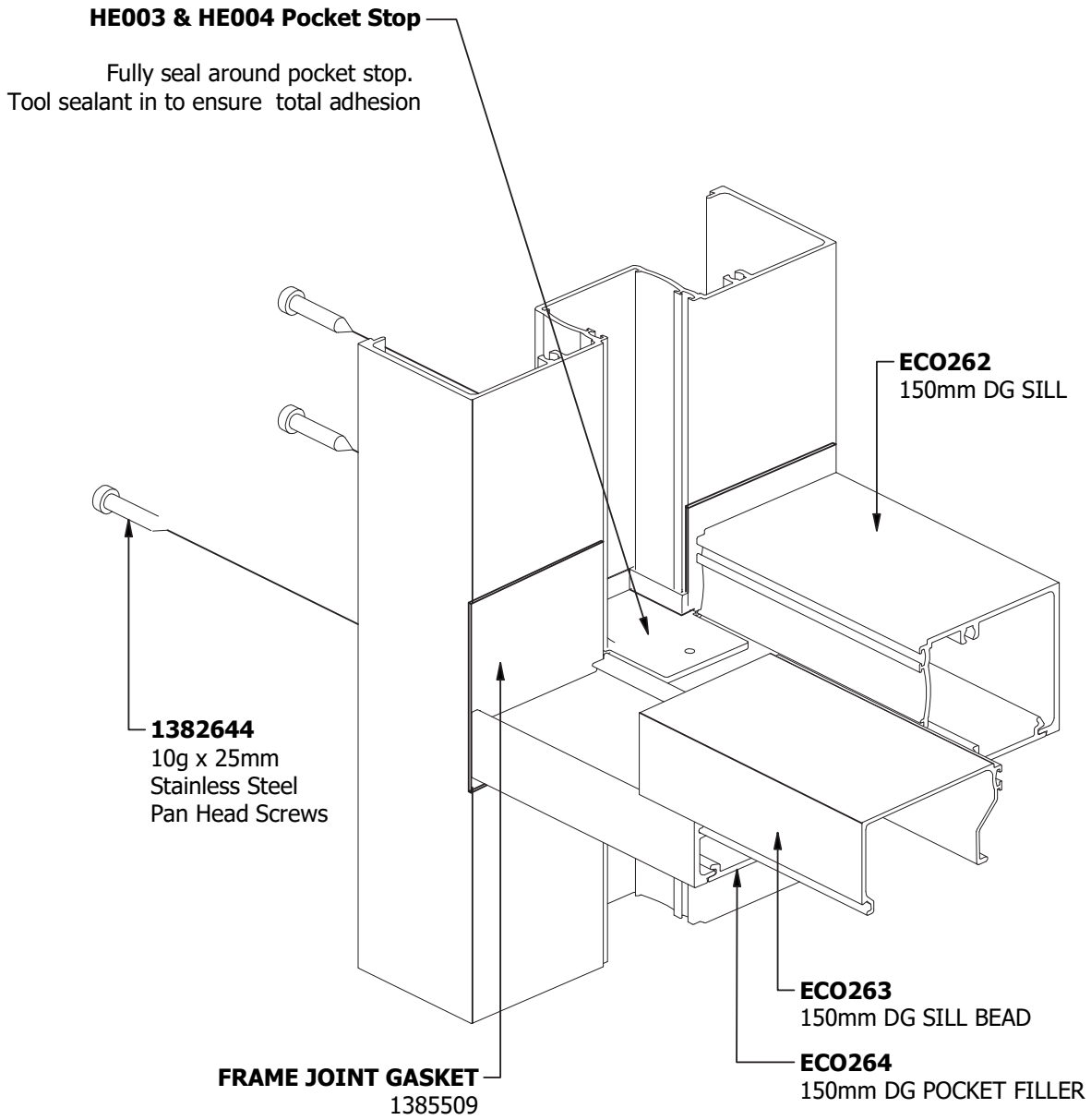

12. Glazing Details

Glazing Details - Captive

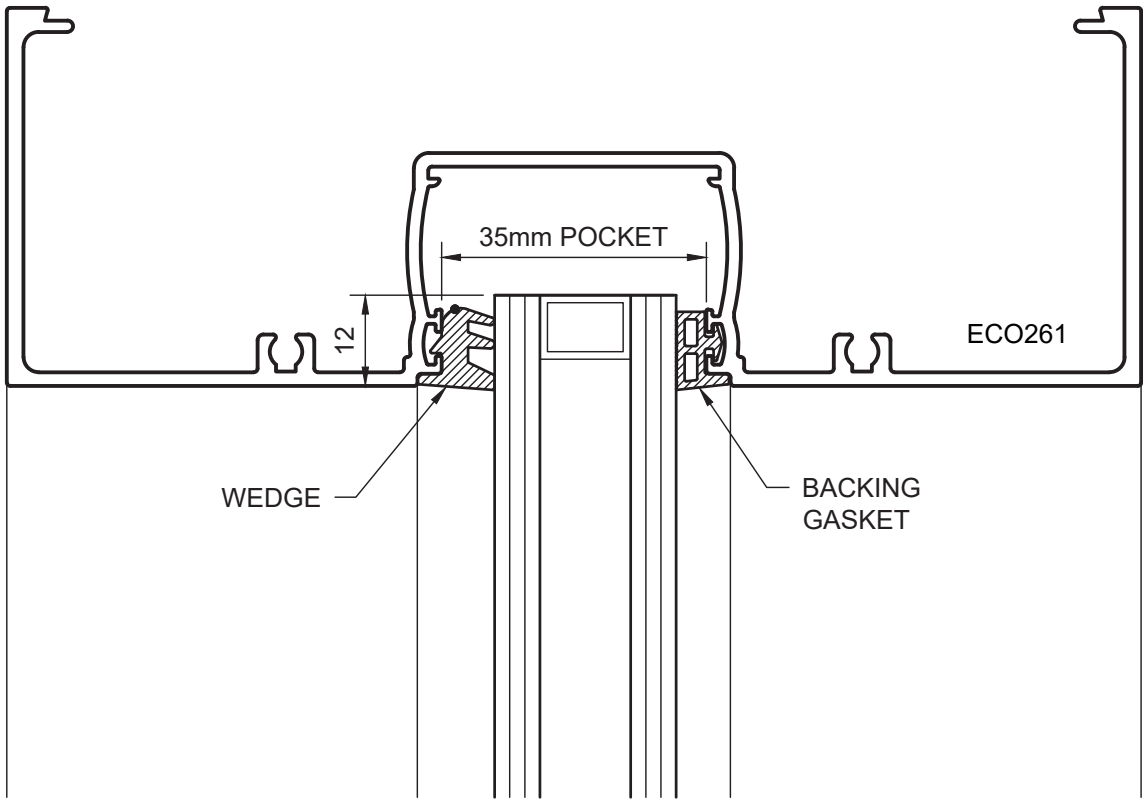

	WEDGE		PUSH IN BACKING GASKET	CO-EXTRUDED BACKING GASKET
GLASS THICKNESS	ID COLOUR	REF. (GAP)	REF. (GAP)	REF. (GAP)
20mm	GREEN	GR50 (9mm)	GR49 (6mm)	CE49 (6mm)
22mm	RED	GR47 (7mm)	GR49 (6mm)	CE49 (6mm)
24mm	RED	GR47 (7mm)	GR37 (4mm)	CE37 (4mm)
25mm	YELLOW	GR46 (6mm)	GR37 (4mm)	CE37 (4mm)
26mm	BLUE	GR45 (5mm)	GR37 (4mm)	CE37 (4mm)
28mm	BROWN	GR43 (3mm)	GR37 (4mm)	CE37 (4mm)

Glazing Details - with ECO240 & ECO241 Glazing Adaptors

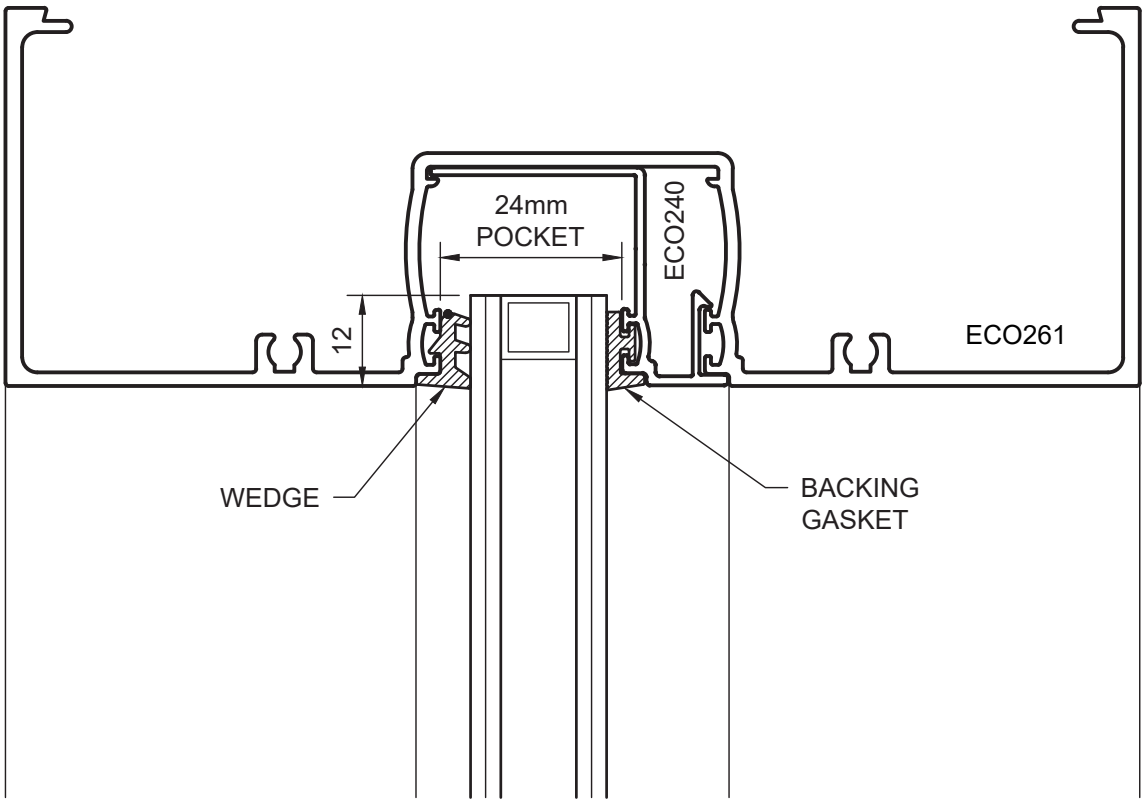

	WEDGE		PUSH IN BACKING GASKET	CO-EXTRUDED BACKING GASKET
GLASS THICKNESS	ID COLOUR	REF. (GAP)	REF. (GAP)	REF. (GAP)
12mm	ORANGE	GR48 (8mm)	GR37 (4mm)	CE37 (4mm)
12.38mm	RED	GR47 (7mm)	GR37 (4mm)	CE37 (4mm)
14mm	YELLOW	GR46 (6mm)	GR37 (4mm)	CE37 (4mm)
16mm	WHITE	GR44 (4mm)	GR37 (4mm)	CE37 (4mm)
18mm	WHITE	GR44 (4mm)	GR36 (2mm)	CE36 (2mm)

12. Glazing Details

Glazing Details - With ECO210 Glazing Adaptor

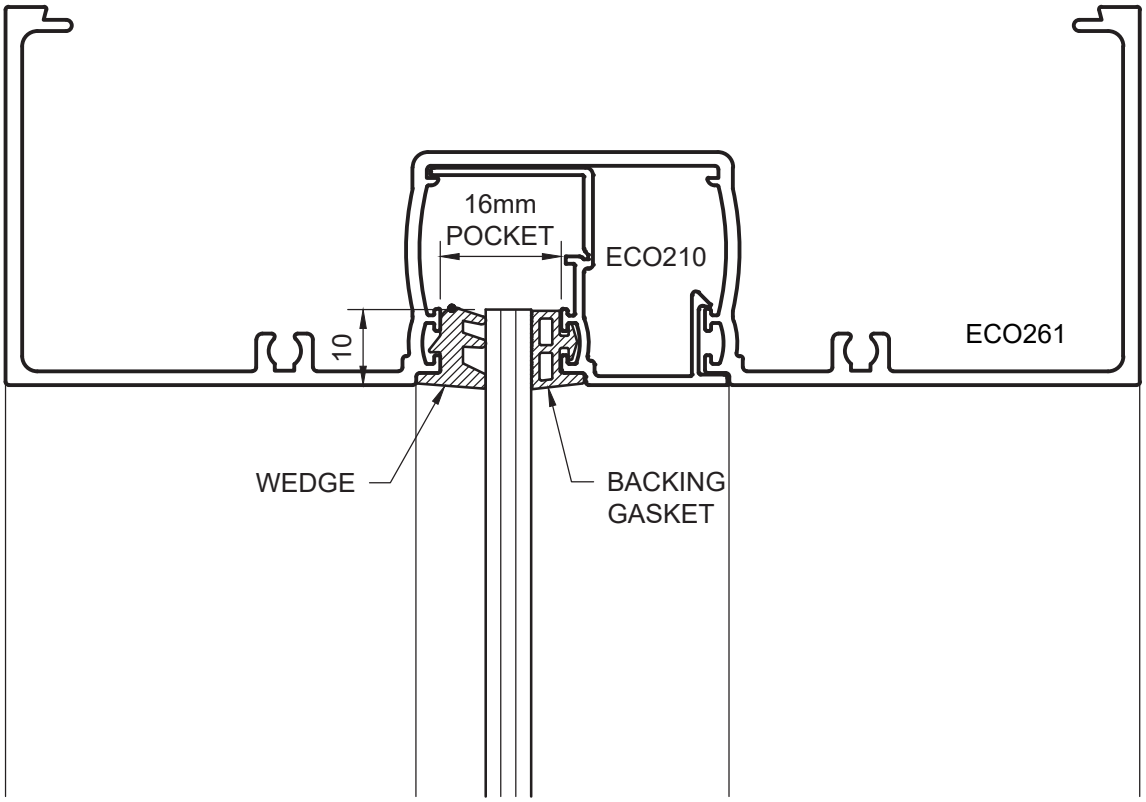

	WEDGE		PUSH IN BACKING GASKET	CO-EXTRUDED BACKING GASKET
GLASS THICKNESS	ID COLOUR	REF. (GAP)	REF. (GAP)	REF. (GAP)
4mm	ORANGE	GR48 (8mm)	GR37 (4mm)	CE37 (4mm)
5mm	RED	GR47 (7mm)	GR37 (4mm)	CE37 (4mm)
6mm	YELLOW	GR46 (6mm)	GR37 (4mm)	CE37 (4mm)
6.38mm	YELLOW	GR46 (6mm)	GR37 (4mm)	CE37 (4mm)
8mm	WHITE	GR44 (4mm)	GR37 (4mm)	CE37 (4mm)
8.38mm	WHITE	GR44 (4mm)	GR37 (4mm)	CE37 (4mm)
10mm	WHITE	GR44 (4mm)	GR36 (2mm)	CE36 (2mm)
10.38mm	WHITE	GR44 (4mm)	GR36 (2mm)	CE36 (2mm)

13. Care & Maintenance

FRAMING

Your new **ecoFRAMEplus 150mm Centre Pocket DG** frames have been manufactured using the highest quality materials available to the Architectural industry. Constructed from Architectural grade aluminium, these products are highly corrosion resistant and exceptionally strong. With a moderate amount of maintenance, the **ecoFRAMEplus 150mm Centre Pocket DG** frame will retain it's good looks and resist the elements for years to come.

The **ecoFRAMEplus 150mm Centre Pocket DG** frames are the product of extensive research and development and designed to resist corrosion and rusting, but as with all external elements on the building require some maintenance to keep them looking good and performing well. Depending on how harsh the environment elements are, the maintenance period will vary. Refer to recommended maintenance table below.

Your **ecoFRAMEplus 150mm Centre Pocket DG** frames should only ever need to be washed down with a soft bristled brush using warm water and mild detergent. Rinse well with fresh water and remove any detergent residue. Strong detergents and abrasive cleaners should never be used to clean the **ecoFRAMEplus 150mm Centre Pocket DG** frames as they may scratch or damage the surface finish.

MAINTENANCE PERIOD TABLE

ENVIRONMENT	RECOMMENDED MAXIMUM MAINTENANCE INTERVAL
Mild	Six Months
Moderate	Three Months
Tropical/Severe	One Month

Environmental Definitions:

Mild – Being rural, away from the coast and remote from industry and urban activity.

Moderate – Being mainly urban, inland and away from heavy industry.

Tropical – Being coastal/marine, subject to salt deposition and within 15km of the Eastern coast or 10km of the Western coast of Australia.

EVERYTHING ALUMINIUM & HARDWARE

HEAD OFFICE | 3 Alspec Place, Eastern Creek NSW 2766
Phone: 02 9834 9500 | Fax: 02 9834 9532 | info@alspec.com.au

ALSPEC SHOWROOMS

AluSpace by Alspec - Sydney | 110 New South Head Road, Edgecliff NSW 2027
Phone: 1300 ALUSPACE (1300 258 772) | design@alspec.com.au

AluSpace by Alspec - Adelaide | 1 Pope Court, Beverley SA 5009
Phone: 08 8150 6960 | adelaidealuspace@alspec.com.au

Brisbane Design Centre | 66 Merivale Street, South Brisbane QLD 4101
Phone: 07 3089 4900 | brisbane@alspec.com.au

MELBOURNE BRANCH
26–40 Pound Road West
Dandenong South VIC 3175
Phone: 03 8787 6333
Fax: 03 8787 6399
melbourne@alspec.com.au

ADELAIDE BRANCH
1 Pope Court
Beverley SA 5009
Phone: 08 8150 6960
Fax: 08 8150 6999
adelaide@alspec.com.au

PERTH BRANCH
30 Holder Way
Malaga WA 6090
Phone: 08 9209 9100
Fax: 08 9209 9199
perth@alspec.com.au

BRISBANE BRANCH
8–22 Jutland Street
Loganlea QLD 4131
Phone: 07 3089 4900
Fax: 07 3089 4999
brisbane@alspec.com.au

NEWCASTLE BRANCH
95 Griffiths Road
Lambton NSW 2299
Phone: 02 4952 9111
Fax: 02 4952 9728
newcastle@alspec.com.au

CAIRNS BRANCH
34–38 Hargreaves Street
Edmonton QLD 4869
Phone: 07 4037 6666
Fax: 07 4037 6699
cairns@alspec.com.au

CANBERRA BRANCH
28 Sheppard Street
Hume ACT 2620
Phone: 02 5134 3300
canberra@alspec.com.au

DARWIN BRANCH
25 Bishop Street
Woolner NT 0820
Phone: 08 8941 7300
darwin@alspec.com.au

SUNSHINE COAST BRANCH
4-8 Empire Crescent
Chevallum QLD 4555
Phone: 07 5437 6123
Fax: 07 5437 6124
chevallum@alspec.com.au

BRENDALE BRANCH
24 Doherty Street
Brendale QLD 4500
Phone: 07 3205 9911
Fax: 07 3205 9915
brendale@alspec.com.au

TOWNSVILLE BRANCH
21 Carroll Street
Mount Louisa QLD 4814
Phone: 07 3089 4965
Fax: 1300 131 747
townsville@alspec.com.au

BUNDABERG BRANCH
17 Production Street
Svensson Heights QLD 4670
Phone: 07 4111 2000
Fax: 07 4111 2099
bundaberg@alspec.com.au

All pictures shown in this catalgoue are for illustration purposes only. Actual product may vary due to product enhancement.